APPENDIX I

Designation: E 338 - 68 (Reapproved 1973)

American National Standard Z260.1-1973
Approved March 29, 1973
By American National Standards Institute

Standard Method of SHARP-NOTCH TENSION TESTING OF HIGH-STRENGTH SHEET MATERIALS[1]

This Standard is issued under the fixed designation E 338; the number immediately following the designation indicates the year of original adoption or, in the case of revision, the year of last revision. A number in parentheses indicates the year of last reapproval.

1. Scope

1.1 This method covers the determination of a comparative measure of the resistance of sheet materials to unstable fracture originating from a very sharp stress-concentrator or crack. It relates specifically to fracture under continuously increasing load and excludes conditions of loading that produce creep or fatigue. The quantity determined is the sharp-notch strength of a specimen of particular dimensions, and this value depends upon these dimensions as well as the characteristics of the material. The sharp-notch strength:yield strength ratio is also determined.

1.2 This method is restricted to one specimen width which is generally suitable for evaluation of high-strength materials (yield strength-to-density ratio above 700,000 psi/lb · in.$^{-3}$ or (18 kgf/mm^2)/(g/cm^3)). The test will discriminate differences in resistance to unstable fracture when the sharp-notch strength is less than the tensile yield strength. The discrimination increases as the ratio of the notch strength to the yield strength decreases.

1.3 This method is restricted to sheet materials not less than 0.025 in. (0.64 mm) and not exceeding 0.25 in. (6 mm) in thickness. Since the notch strength may depend on the sheet thickness, comparison of various material conditions must be based on tests of specimens having the same nominal thickness.

1.4 The sharp-notch strength may depend strongly upon temperature within a certain range depending upon the characteristics of the material. The method is suitable for tests at any appropriate temperature. However, comparisons of various material conditions must be based on tests conducted at the same temperature.

NOTE 1—Further information on background and need for this type of test is given in the first report by the ASTM Committee on Fracture Testing of High-Strength Sheet Materials.[2]

NOTE 2—The values stated in U.S. customary units are to be regarded as the standard. The metric equivalents of U.S. customary units may be approximate.

2. Significance

2.1 The method provides a comparative measure of the resistance of sheet materials to unstable fracture originating from the presence of cracks or crack-like stress concentrators. It is not intended to provide an absolute measure of resistance to crack propagation which might be used in calculations of the strength of structures. However, it can serve the following purposes:

2.1.1 In research and development of materials, to study the effects of the variables of composition, processing, heat-treatment, etc.;

2.1.2 In service evaluation, to compare the relative crack-propagation resistance of a number of materials which are otherwise equally suitable for an application, or to eliminate materials when an arbitrary minimum acceptable sharp-notch strength can be established on the basis of service performance cor-

[1] This method is under the jurisdiction of ASTM Committee E-24 on Fracture Testing of Metals.

Current edition effective Nov. 15, 1968. Originally issued 1967. Replaces E 338 - 67.

[2] "Fracture Testing of High-Strength Sheet Materials," *ASTM Bulletin*, ASTBA, No. 243, 1960, pp. 29–40; *ibid.*, No. 244, 1960, pp. 18–28.

Copyright© 1977 by ASTM International www.astm.org

relation, or some other adequate basis;

2.1.3 For specifications of acceptance and manufacturing quality control when there is a sound basis for establishing a minimum acceptable sharp-notch strength. Detailed discussion of the basis for setting a minimum in a particular case is beyond the scope of this method.

2.2 The sharp-notch strength may decrease rapidly through a narrow range of decreasing temperature. This temperature range and the rate of decrease depend on the material and its thickness. The temperature of the specimen during each test shall therefore be controlled and recorded. Tests shall be conducted throughout the range of expected service temperatures to ascertain the relation between notch strength and temperature. Care shall be taken that the lowest and highest anticipated service temperature are included.

2.3 Limited results suggest that the sharp-notch strengths of stable high-strength steels are not appreciably sensitive to rate of loading within the range of loading rates normally used in conventional tension tests. Where very low or high rates of loading are expected in service, the effect of loading rate should be investigated using special procedures that are beyond the scope of this method.

2.4 The precision of sharp-notch strength measurement should be equivalent to that of the ordinary tensile strength of a sheet specimen since both depend upon measurements of load and of dimensions of comparable magnitude. However, the sharp-notch strength is more sensitive to local flaws than the tensile strength and normally shows more scatter. The influence of this scatter should be reduced by testing duplicate specimens and averaging the results.

3. Description of Term

3.1 *Sharp-Notch Strength* of an appropriate specimen, as described below, is a value determined by dividing the maximum load sustained in a slow tension test by the initial area of supporting cross section in the plane of the notches or cracks. This calculation of notch strength takes no account of any crack extension which may occur during the test. The sharp-notch strength is thus analogous to the tensile strength of a standard tension test specimen which is based on the area of the specimen before testing.

4. Apparatus

4.1 The test shall be conducted with a tension testing machine that conforms to the requirements of ASTM Method E 4, for Verification of Testing Machines.[3]

4.2 The devices for transmitting load to the specimen shall be such that the major axis of the specimen coincides with the load axis. A satisfactory arrangement incorporates clevises carrying hardened pins which pass through holes in the ends of the specimen, the diameter of the pins being only slightly smaller than that of the holes. Spacing washers of the necessary thickness shall be used to center the specimen in the clevises. A typical arrangement is shown in Fig. 1.

4.3 *Temperature Control*—For the tests at other than room temperature, any suitable means may be used to heat or cool the specimen and to maintain a uniform temperature over the region that includes the notch or crack. The ability of the equipment to provide a region of uniform temperature shall be established by measurements of the temperature at positions on both faces of a specimen as shown in Fig. 2. The temperature surveys shall be conducted either at each temperature level at which tests are to be made, or at a series of temperature levels at intervals of 50 F (30 C) over the range of test temperatures. The test temperature shall be held within $\pm 2^1/_2$ F ($\pm 1^1/_2$ C) during the course of the test. At the test temperature the difference between the indicated temperatures at any two of the four thermocouple positions shall not exceed 5 F (3 C).

NOTE 3—A convenient means of heating or cooling flat specimens consists of a pair of flat copper or brass plates which contact the surfaces of the specimen. The plates are fitted with heating or cooling devices designed to maintain uniformity of temperature of the contact surfaces. Thermocouples may be permanently incorporated with their junctions at the contact surfaces. Such devices have been found convenient and reliable for temperatures from that of liquid nitrogen to at least 600 F (330 C).[4] The use of liquid baths for heating specimens shall be avoided unless it can be established that the liquid

[3] *Annual Book of ASTM Standards*, Parts 10, 14, 32, 35, and 41.

[4] Srawley, J. E., and Beachem, C. D., *NRL Report 5127*, NRLRA, April 9, 1958.

has no effect on the sharp-notch strength of the material.

4.4 *Temperature Measurement*—The temperature of the specimen during any test at other than room temperature shall be measured at one, or preferably more than one, of the positions shown in Fig. 2. The junctions of the thermocouples shall be in good thermal contact with the specimen. The thermocouples and measuring instruments shall be calibrated and shall be accurate to within $\pm 2^1/_2$ F ($\pm 1^1/_2$ C).

5. Test Specimens

5.1 Suggested designs for a standard 3-in. (75-mm) wide machined sharp edge-notch test specimen, EN, and a fatigue center-crack specimen, CC, are shown in Figs. 3 and 4. The dimensions of the notched or cracked regions shall be as indicated and pin loading shall be used. It will be noted that the length of the standard specimen is specified as 12 in. (300 mm) with the provision that, where unavoidable due to material limitations, a substandard length (8 in., 200 mm) specimen may be used. However, for identical test conditions on the same material the 8-in. specimen will give a different strength value than the standard specimen. For this reason comparisons of various material conditions must be based on tests conducted with the same length specimen. Specimens with parallel sides are shown, and these will fracture in the notched section for the great majority of materials. However, for exceptionally tough conditions where the notch strength exceeds the yield strength, fracture may occur at the pin hole unless suitable head reinforcing plates are provided. A suggested design for such plates is shown in Fig. 5. One plate is used on each side of the specimen heads, and loads are transmitted to the plates by three hardened $^1/_4$-in. (6-mm) diameter pins having a length that will permit them to enter the slot in the loading clevises (see Fig. 1). If the plates are $^1/_8$ in. (3 mm) thick and made of a material having a 200,000-psi (1380 MPa) minimum yield strength, they may be used in any test covered by this method.

5.2 The sharpness of the machined notches is a critical feature of the sharp edge-notched specimen, EN, of Fig. 3 and special care is required to prepare them.[5] Finish machining of the notch may be completed either before or after final heat treatment. For each specimen the notch root radii and notch location with respect to the pin-hole centers shall be measured prior to testing, and specimens that do not meet the requirements of Fig. 3 shall be discarded or reworked.

5.3 Center-cracked specimens having high notch acuity have been prepared by machining with sharp tools and by electric discharge methods. However, fatigue cracking of a prenotched sample is preferred and shall be used in this method. The production of fatigue cracks requires the machining of a suitable crack starter (see Appendix A1). A preferred technique for generating the fatigue cracks is given in Appendix A2. Fatigue cracking may be done either before or after full heat treatment. Specimens that do not meet the requirements of Fig. 4 shall be discarded.

6. Procedure

6.1 *Dimensions*—Measure the thickness, *h*, to the nearest 0.0005 in. (0.013 mm) at not less than three positions between the machined notches or between the crack tips and specimen edge, and record the average value. If the variation in thickness about the average is greater than ± 2 percent record a survey of the thickness. Measure the distance between notch roots of specimen EN, the net section width, to the nearest 0.01 in. (0.25 mm) and the notch root radii to the nearest 0.00025 in. (0.006 mm), and record. In the case of specimen CC, measure the width of the specimen before testing to the nearest 0.001 in. (0.025 mm) and record, and measure the over-all crack length, from the most advanced point of one fatigue crack to the most advanced point of the other, after testing to the nearest 0.001 in. (0.025 mm), and record. The width minus the over-all crack length is the net section width.

6.2 *Testing*—Conduct the test in a similar manner to that of an ordinary tension specimen except that no extensometer is required. It is recommended that a suitable lubricant,

[5] March, J. L., Ruprecht, W. J., and Reed, George, "Machining of Notched Tension Test Specimens," *ASTM Bulletin*, ASTBA, No. 244, 1960, pp. 52–55.

such as MoS_2, be used on the loading pins and on the spherical seat in the heads of the tension testing machine to assist in alignment. No staining fluids shall be introduced into the notches or cracks in order to define slow crack extension, unless it has been proven that the substance used will not influence the notch strength. The speed of testing shall be such that the rate of increase of nominal stress on the notched or cracked section shall not exceed 100,000 psi (690 MPa)/min at any stage of the test. Record the maximum load, P, reached during the test, to the smallest change of load which can be estimated.

6.3 *Sharp-Notch Strength*—Calculate the sharp-notch strength as $P/(h \times$ net section width).

6.4 *Fracture Appearance*—The appearance of the fracture is valuable subsidiary information and shall be briefly noted for each specimen. One common type of fracture is shown in Fig. 6(*a*). This consists of a central flat band, transverse to the specimen axis, and bordered by relatively narrow oblique bands. If the oblique bands are fairly uniform, measure the average width, b, of the transverse band and record the ratio $(h - b)/h$ as the proportion of oblique fracture per unit thickness, or *oblique fraction*. In the case of test specimen EN, the measurement b shall be at a point within the middle third of the specimen width. For specimen CC, make measurements on each side of the center slot at points not closer than one plate thickness to the edge nor farther than $^5/_{16}$ in. (8 mm) form the edge. Average these measurements to obtain the oblique fraction. Generally, this fraction cannot be determined to better than the nearest 0.05 for either specimen. If the oblique borders are comparatively broad they will generally be irregular, as in Fig. 6(*b*). The fracture appearance may then be recorded as "Predominantly Oblique." If the flat transverse fracture is confined to well-defined triangular regions at the notch roots, as in Fig. 6(*c*), the fracture appearance may be recorded as "Full Oblique." In some cases the fracture appearance does not correspond with these classifications. For instance, fractures having a rough laminated appearance sometimes occur. In such cases a short descriptive notation such as "Laminated" may be recorded. Typically, the fracture appearance and the sharp-notch strength will undergo concomitant changes with variation in some parameter such as test temperature, thickness, or a heat-treatment variable. There is often a quite abrupt increase in sharp-notch strength as fracture appearance changes from predominantly transverse to full oblique over a restricted range of the parameter.

6.5 *Sharp-Notch Strength/Yield Strength Ratio*—The ratio of sharp-notch strength to tensile yield strength is of significance. Prepare standard tension test specimens[6] of the same stock and process together with the sharp-notch specimens so that this ratio can be determined without ambiguity in relation to the processing of the material.

7. Report

7.1 At least two sharp edge-notched or fatigue center-cracked specimens shall be tested for each distinct set of values of the controlled variables (material factors, thickness, temperature). For the purpose of calculating the sharp-notch strength/yield strength ratio at other than room temperature, the yield strength may be interpolated from values at temperatures not more than 100 F (50 C) above and below the temperature at which the sharp notch test is performed.

7.2 The report shall include the following information for each sharp-notch specimen tested: type of specimen (EN or CC), length, thickness, width, notch depth or crack length, notch root radii, temperature, maximum load, oblique fraction, and sharp-notch strength. The tensile ultimate and yield strength corresponding to each set of controlled variables used for the notch test should also be reported along with the sharp-notch strength/yield strength ratio.

[6] See Section 4 of ASTM Methods E 8, Tension Testing of Metallic Materials (*Annual Book of ASTM Standards*, Parts 6, 7, and 10).

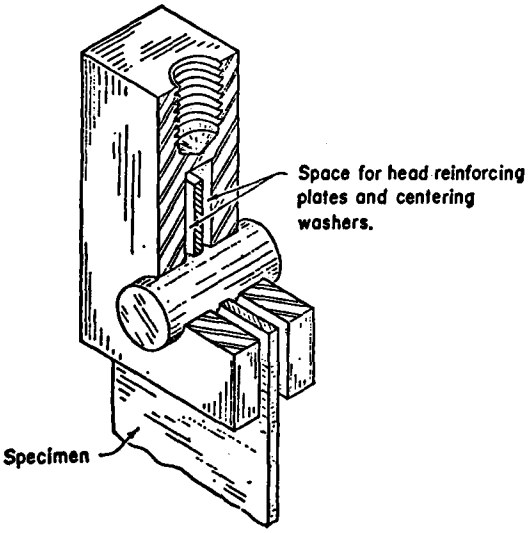

FIG. 1 Specimen Loading Clevis with Hardened Pin.

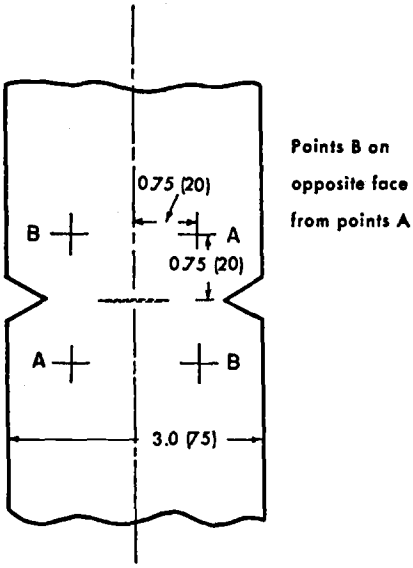

NOTE—Dimensions in inches with millimeter dimensions in parentheses.

FIG. 2 Positions of Thermocouple Junctions for Temperature Surveys.

E 338

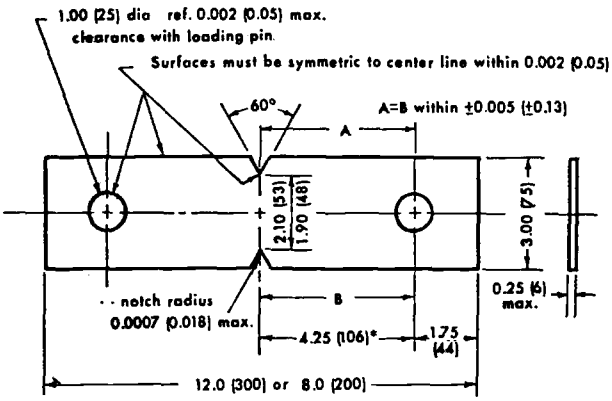

*This dimension is 2.25 (56) for the substandard length specimen

NOTE—Dimensions in inches with millimeter dimensions in parentheses.

FIG. 3 Machined Sharp Edge-Notch Specimen, EN.

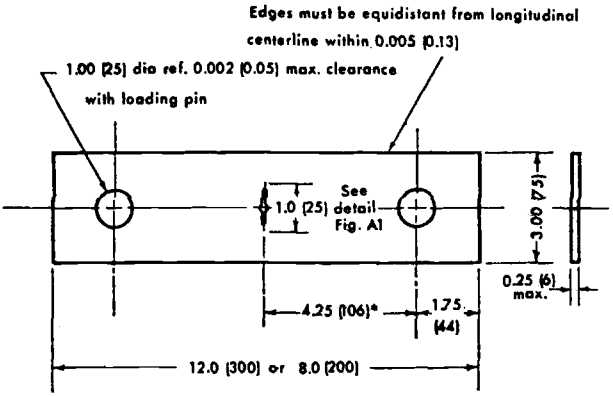

*This dimension is 2.25 (56) for the substandard length specimen

NOTE—Dimensions in inches with millimeter dimensions in parentheses.

FIG. 4 Fatigue Center-Crack Specimen, CC.

E 338

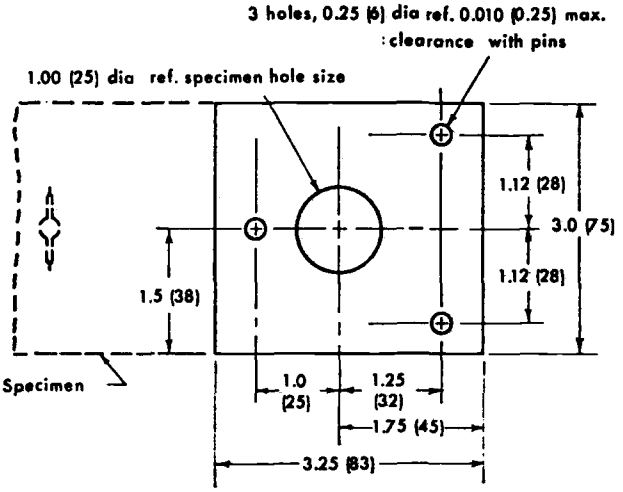

NOTE—Dimensions in inches with millimeter dimensions in parentheses.

FIG. 5 Reinforcing Plate for Specimen Head.

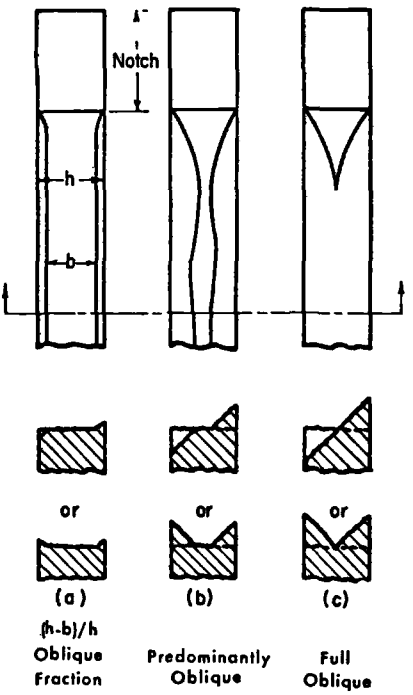

FIG. 6 Common Types of Fracture Appearance.

APPENDIXES

A1. Fatigue Crack Starter

A1.1 Various types of crack starters may be employed provided they have a sufficiently high stress concentration to produce fatigue cracks in a reasonable number of cycles at the nominal stress level specified below, and provided the fatigue crack extension is sufficient to avoid the stress field produced by the starter tip. A tip width of 0.008 in. (0.2 mm) maximum at the end of a 0.7-in. (18-mm) long starter will provide a sufficiently high stress concentration. Fatigue crack extension from each tip should be at least twice the tip width. Fig. A1 shows a suggested design for the crack starter consisting of a 0.25-in. (6-mm) center hole extended by saw cuts terminated in narrow slots having a maximum width of 0.008 in. (0.2 mm). In many materials the narrow slots can be produced by a jeweler's saw. A narrower slot can be produced by electrical discharge machining methods. Alternative crack starter designs may be used but must lie within the envelope defined by the 30-deg included angles having their apexes at the ends of the fatigue cracks.

A2. Production of Fatigue Cracks

A2.1 Fatigue cracks at the starter tips shall be produced by cyclic tension-tension stressing, pin loading in the same manner as used in tension testing. Again lubrication of the pins with MoS_2 is recommended to minimize any tendency for cracking at the pin holes. The minimum and maximum loads should be selected by experience so that fatigue crack extension can be readily observed and controlled. The nominal net stress at the maximum load may be typically 10 to 40 percent and should not exceed 50 percent of the yield strength. If the maximum tension stress is excessive, post fracture examination may reveal the fatigue crack obviously does not lie in a plane perpendicular to the specimen surface. In such cases the test result should be discarded.

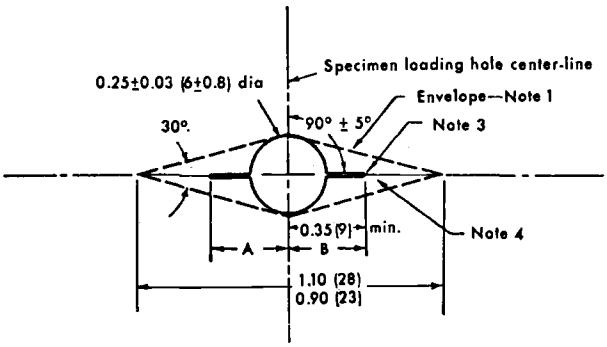

NOTE 1—Starter slot configuration must lie within the envelope that has its apexes at the end of the fatigue cracks.
NOTE 2—$A = B$ within 0.010 in. (0.25 mm).
NOTE 3—Maximum width of crack starter slot at its tip = 0.008 in. (0.2 mm).
NOTE 4—Fatigue crack must extend from each crack starter slot a distance of at least two times the slot tip width.
NOTE 5—Dimensions in inches with millimeter dimensions in parentheses.

FIG. A1 Suggested Design for Center Fatigue Crack Starter.

By publication of this standard no position is taken with respect to the validity of any patent rights in connection therewith, and the American Society for Testing and Materials does not undertake to insure anyone utilizing the standard against liability for infringement of any Letters Patent nor assume any such liability.

APPENDIX II

Designation: E 399 – 74

American National Standard Z260.2
American National Standards Institute

Standard Test Method for PLANE-STRAIN FRACTURE TOUGHNESS OF METALLIC MATERIALS[1]

This Standard is issued under the fixed designation E 399; the number immediately following the designation indicates the year of original adoption or, in the case of revision, the year of last revision. A number in parentheses indicates the year of last reapproval.

1. Scope

1.1 This method covers the determination of the plane-strain fracture toughness (K_{Ic}) of metallic materials by a bend or a compact test of a notched and fatigue-cracked specimen having a thickness of 0.25 in. (6.4 mm) or greater.

NOTE 1—Plane-strain fracture toughness tests of thinner materials that are sufficiently brittle (see 6.1) can be made with other types of specimens (**1**).[2] There is no standard test method for testing such thin materials.

1.1.1 The bend specimen is a single-edge notched beam loaded by three-point bending.

1.1.2 The compact specimen is single-edge notched and pin loaded in tension.

1.2 The specimen size required for testing purposes increases as the square of the ratio of toughness to yield strength of the material, therefore a range of proportional specimens is provided.

1.3 This method also covers the determination of the specimen strength ratio (R_{sb} for a bend specimen, or R_{sc} for a compact specimen), which is a function of the maximum load that the specimen can sustain, its dimensions, and the yield strength of the material. This ratio is a useful comparative measure of the toughness of materials when the specimens tested are of the same form and size, and when the size is sufficient that the maximum load results from pronounced crack extension prior to plastic instability, even though the size may be much less than sufficient for a valid K_{Ic} determination.

NOTE 2—The values stated in U.S. customary units are to be regarded as the standard.

2. Applicable Documents

2.1 *ASTM Standards:*

E 8, Tension Testing of Metallic Materials[3]

E 337, Determining Relative Humidity by Wet- and Dry-Bulb Psychrometer[4]

E 338, Sharp-Notch Tension Testing of High-Strength Sheet Materials[3]

3. Summary of Method

3.1 The method involves tension or three-point bend testing of notched specimens that have been precracked in fatigue. Load versus displacement across the notch at the specimen edge is recorded autographically. The load corresponding to a 2 % increment of crack extension is established by a specified deviation from the linear portion of the record. The K_{Ic} value is calculated from this load by equations which have been established on the basis of elastic stress analysis of specimens of the types described below. The validity of the determination of K_{Ic} value by this method depends upon the establishment of a *sharp-crack* condition at the tip of the fatigue crack, in a specimen of adequate size. To establish a suitable crack-tip condition, the stress intensity level at which the fatigue precracking of the specimen is conducted is limited to a relatively low value.

---

[1] This method is under the jurisdiction of ASTM Committee E-24 on Fracture Testing of Metals.

Current edition approved April 29, 1974. Published July 1974. Originally published as E 399 – 70 T. Replaces E 399 – 72.

[2] The boldface numbers in parentheses refer to the reports and papers appearing in the list of references at the end of this method.

[3] *Annual Book of ASTM Standards*, Parts 6, 7, and 10.

[4] *Annual Book of ASTM Standards*, Parts 20, 32, and 41.

4. Significance

4.1 The property K_{Ic} determined by this method characterizes the resistance of a material to fracture in a neutral environment in the presence of a sharp crack under severe tensile constraint, such that the state of stress near the crack front approaches tritensile plane strain, and the crack-tip plastic region is small compared with the crack size and specimen dimensions in the constraint direction. A K_{Ic} value is believed to represent a lower limiting value of fracture toughness. This value may be used to estimate the relation between failure stress and defect size for a material in service wherein the conditions of high constraint described above would be expected. Background information concerning the basis for development of this test method in terms of linear elastic fracture mechanics may be found in Refs (**1**) and (**2**).

4.1.1 The K_{Ic} value of a given material is a function of testing speed and temperature. Furthermore, cyclic loads can cause crack extension at K_I values less than the K_{Ic} value. Crack extension under cyclic or sustained load will be increased by the presence of an aggressive environment. Therefore, application of K_{Ic} in the design of service components should be made with awareness to the difference that may exist between the laboratory tests and field conditions.

4.1.2 Plane-strain crack toughness testing is unusual in that there can be no advance assurance that a valid K_{Ic} will be determined in a particular test. Therefore it is essential that all of the criteria concerning validity of results be carefully considered as described herein.

4.1.3 Clearly it will not be possible to determine K_{Ic} if any dimension of the available stock of a material is insufficient to provide a specimen of the required size. In such a case the specimen strength ratio determined by this method will often have useful significance. The specimen strength ratio will depend on the form and size of the specimen as well as on the material. It is significant as a comparative measure of material toughness when results are compared from specimens of the same form and size, and when this size is sufficient that the limit load of the specimen is a consequence of pronounced crack extension prior to plastic instability (although it might be much less than sufficient for a valid K_{Ic} determination).

4.1.3.1 The strength ratio for precracked specimens tested in uniaxial tension may be determined by Method E 338.[3]

4.2 This method can serve the following purposes:

4.2.1 In research and development to establish, in quantitative terms, significant to service performance, the effects of metallurgical variables such as composition or heat treatment, or of fabricating operations such as welding or forming, on the fracture toughness of new or existing materials.

4.2.2 In service evaluation, to establish the suitability of a material for a specific application for which the stress conditions are prescribed and for which maximum flaw sizes can be established with confidence.

4.2.3 For specifications of acceptance and manufacturing quality control, but only when there is a sound basis for specification of minimum K_{Ic} values, and then only if the dimensions of the product are sufficient to provide specimens of the size required for valid K_{Ic} determination. The specification of K_{Ic} values in relation to a particular application should signify that a fracture control study has been conducted on the component in relation to the expected history of loading and environment, and in relation to the sensitivity and reliability of the crack detection procedures that are to be applied prior to service and subsequently during the anticipated life.

5. Definitions

5.1 *stress-intensity factor*, K_I ($FL^{-3/2}$)—a measure of the stress-field intensity near the tip of an ideal crack in a linear elastic medium when deformed so that the crack faces are displaced apart, normal to the crack plane (opening mode or mode I deformation). K_I is directly proportional to applied load and depends on specimen geometry. See Ref (**3**), on "Stress Analysis of Cracks."

5.2 *plane-strain fracture toughness*, K_{Ic} ($FL^{-3/2}$)—the material-toughness property measured in terms of the stress-intensity factor K_I by the operational procedure specified in this test method.

5.2.1 In this method, measurement of K_{Ic}

is based on the lowest load at which significant measurable extension of the crack occurs. Significant measurable extension is defined in terms of a specified deviation from linearity of the load-displacement curve as described in 9.1. In some instances this may coincide with the maximum load, but frequently the specimen will sustain a higher load than that at which significant crack extension occurs.

6. Apparatus

6.1 The procedure involves testing of notched specimens that have been precracked in fatigue. Load versus displacement across the notch is recorded autographically. Testing may be done in various machines having suitable load sensing devices for instrumenting to an autographic recorder or recording device.

6.2 *Bend-Test Fixture*—The bend-test fixture must be designed to minimize errors which can arise from friction between the specimen and the supports. The friction effect can be virtually eliminated if the test fixture is designed to allow the support rolls to rotate and move apart slightly, thus permitting rolling contact to be maintained. A recommended fixture design is shown in Fig. 1. The support rolls are allowed limited motion along plane surfaces, but are initially positively positioned against stops by low tension springs (such as rubber bands).

6.3 *Grips and Fixtures for Compact Test*—The general gripping arrangement for testing of compact K_{Ic} specimens is shown in Fig. 2. A clevis and pin arrangement is employed at both the top and bottom of the specimen to allow rotation as the specimen is loaded (**4**).

6.3.1 The critical tolerances and suggested proportions of the clevis and pins are given in Fig. 2. These proportions are based on specimens having $W/B = 2$ for $B > 0.5$ in. (12.7 mm) and $W/B = 4$ for $B \leqq 0.5$ in. (12.7 mm). If a 280,000-psi (1930-MPa) yield strength maraging steel is used for the clevis and pins, adequate strength will be obtained for testing the specimen sizes and σ_{YS}/E ratios given in 7.1.3. If lower-strength grip material is used, or if substantially larger specimens are required at a given σ_{YS}/E ratio than those shown in 7.1.3, then heavier grips will be required. As indicated in Fig. 2, the clevis corners may be cut off sufficiently to accommodate seating of the clip gage in specimens less than 0.375 in. (9.5 mm) thick.

6.3.2 Careful attention should be given to achieving as good alignment as possible through careful machining of all auxiliary gripping fixtures (see 8.4).

6.4 *Displacement Gage*—The displacement gage output shall indicate very accurately the relative displacement of two precisely located gage positions spanning the crack notch. Exact and positive positioning of the gage of the specimen is essential, yet the gage must be released without damage when the specimen breaks. A recommended design for a selfsupporting, releasable gage is shown in Fig. 3 and described in the Annex. Figure 3 also shows the manner in which the gage is mounted on the specimen; for this purpose, the specimen must be provided with a pair of accurately machined knife edges. These knife edges can either be machined into the specimen itself, or they can be separate pieces which are fixed to the specimen with screws (see Fig. 7 and 7.2). It is not the intent of this test method to exclude the use of other types of gages or gage fixing devices providing the gage used meets the requirements listed below and providing the gage length does not exceed the limits given in 7.2.5.

6.4.1 Each gage shall be checked for linearity using an extensometer calibrator or other suitable device; the resettability of the calibrator at each displacement interval should be within +0.000020 in. (0.00050 mm). Readings shall be taken at ten equally spaced intervals over the working range of the gage. This calibration procedure should be performed three times, removing and reinstalling the gage in the calibration fixture between each run. The required linearity shall correspond to a maximum deviation of +0.0001 in. (0.0025 mm) of the individual displacement readings from a least-squares-best-fit straight line through the data. The absolute accuracy, as such, is not important in this application, since the test method is concerned with relative changes in displacement rather than absolute values (see 9.1).

7. Specimen Configuration, Dimensions, and Preparation

7.1 *Specimen Size:*

7.1.1 In order for a result to be considered valid according to this method it is required that both the specimen thickness, B, and the crack length, a, exceed 2.5 $(K_{Ic}/\sigma_{YS})^2$, where σ_{YS} is the 0.2 % offset yield strength of the material for the temperature and loading rate of the test (**1,5,6**).

7.1.2 The initial selection of a size of specimen from which valid values of K_{Ic} will be obtained may be based on an estimated value of K_{Ic} for the material. It is recommended that the value of K_{Ic} be overestimated, so that a conservatively large specimen will be employed for the initial tests. After a valid K_{Ic} result is obtained with the conservative-size initial specimen, the specimen size may be reduced to an appropriate size [a and $B \geqq 2.5$ $(K_{Ic}/\sigma_{YS})^2$] for subsequent testing.

7.1.3 Alternatively the ratio of yield strength to Young's modulus can be used for selecting a specimen size that will be adequate for all but the toughest materials:

σ_{YS}/E	Minimum Recommended Thickness and Crack Length	
	in.	mm
0.0050 to 0.0057	3	75
0.0057 to 0.0062	2½	63
0.0062 to 0.0065	2	50
0.0065 to 0.0068	1¾	44
0.0068 to 0.0071	1½	38
0.0071 to 0.0075	1¼	32
0.0075 to 0.0080	1	25
0.0080 to 0.0085	¾	20
0.0085 to 0.0100	½	12½
0.0100 or greater	¼	6½

When it has been established that 2.5 $(K_{Ic}/\sigma_{YS})^2$ is substantially less than the minimum recommended thickness given in the preceding table, then a correspondingly smaller specimen can be used. On the other hand, if the form of the available material is such that it is not possible to obtain a specimen with both crack length and thickness greater than 2.5 $(K_{Ic}/\sigma_{YS})^2$, then it is not possible to make a valid K_{Ic} measurement according to this recommended method.

7.2 *Standard Specimens*—The geometry of standard specimens is shown in Fig. 4, bend specimens, and Fig. 5, compact specimens, with notch details in Fig. 6.

7.2.1 The crack length, a, is nominally equal to thickness, B, and is between 0.45 and 0.55 times the depth, W.

7.2.2 The crack-starter slot configuration must lie within the envelope, shown in Fig. 6, that has its apex at the end of the fatigue crack.

7.2.3 The length of the fatigue crack shall be not less than 5 % of the length, a, and not less than 0.05 in. (1.3 mm) (see Fig. 6).

7.2.4 To facilitate fatigue cracking at a low level of stress intensity (see 7.5) the notch root radius should be 0.003 in. (0.08 mm) or less. However, if a chevron form of notch is used, as shown in Fig. 6b, the notch root radius may be 0.01 in. (0.25 mm), or less.

7.2.5 Attachable or integral knife edges for fixing the clip gage to the specimen shall be provided as shown by the suggested designs in Figs. 7(*a*) and 7(*b*) respectively. The displacements will be essentially independent of the gage length for the bend specimen providing the gage length is equal to or less than $W/2$. For the compact specimen the displacements will be essentially independent of the gage length for any length up to 1.2 W. A design for attachable knife edges is shown in Fig. 7(*a*). This design is based on the gage length requirement for the bend specimen and a knife edge spacing of 0.2 in. (5.1 mm). The effective gage length is established by the points of contact between the screw and hole threads. For the design shown the major diameter of the screw has been used in setting this gage length. A No. 2 screw will permit the use of attachable knife edges for specimens having $W \geqq 1$ in. (25 mm).

7.3 *Alternative Specimens*—The form of available material may be better adapted to alternate specimen shapes than to the standard specimen with $B = 0.5\ W$.

7.3.1 Alternative bend specimens may have $B = 0.25\ W$ to W.

7.3.2 Alternative compact specimens may have $B = 0.25\ W$ to $0.5\ W$.

NOTE 3—The Manjoine WOL design of compact specimen is widely used for monitoring long term irradiation damage in nuclear reactors. When such specimens are prepared and tested in accordance with the procedure of this test method the validity of the results can be judged on the same basis as for specimens of standard geometry, that is, as specified in 9.1.1, 9.1.2, and 9.1.5. In reporting results for such specimens the appropriate expression for calculation of K_Q from load and specimen dimensions should be stated and its origin cited (**5**).

7.3.3 Crack length, a, shall be 0.45 to 0.55

W, the same as for the standard specimen.

7.3.4 The support span, S, for the bend specimen shall be 4 W, the same as for the standard specimen.

7.3.5 The size requirements of 7.1 shall be met, as for the standard specimens.

7.4 *Fatigue Cracking*—The fatigue cracking shall be conducted with the specimen fully heat treated to the condition in which it is to be tested (Note 4). The fatigue crack is to be extended from the notch at least 0.05 in. (1.3 mm) and sufficiently far to meet the requirements of 7.2 or 7.3. To determine when this requirement has been met in practice, it is usually sufficient to observe the traces of the crack on the side surfaces of the specimen. To ensure that the fatigue crack will be sufficiently sharp, flat, and normal to the specimen edge, the following conditons of fatigue cracking shall be met:

7.4.1 The equipment for fatigue cracking shall be such that the load distribution is symmetrical with relation to the notch in planes normal to the thickness direction, and the maximum value of the stress intensity in the fatigue cycle shall be known with an error of not more than 5 %. The fixtures recommended for testing (Figs. 1 and 2) are also suitable for fatigue cracking, and K calibrations for specimens loaded through these fixtures are given in 9.1.3 and 9.1.4. If different fixtures are used the appropriate K calibration should be determined experimentally with those fixtures (7). In particular, if the fatigue cycle involves reversal of load, the K calibration is quite sensitive to the distribution of the clamping forces necessary to grip the specimen.

7.4.2 During the final stage of fatigue crack extension, for at least the terminal 2.5 % of the over-all length of notch plus crack, the ratio of the maximum stress intensity of the fatigue cycle to the Young's modulus, $K_f(\max)/E$, shall not exceed 0.002 in.$^{1/2}$ (0.00032 m$^{1/2}$). Furthermore, $K_f(\max)$ must not exceed 60 % of the K_Q value determined in the subsequent test if K_Q is to qualify as a valid K_{Ic} result (see 9.1).

7.4.3 The stress-intensity range should be not less than 0.9 $K_f(\max)$.

7.4.4 When fatigue cracking is conducted at a temperature T_1 and testing at a different temperature T_2, $K_f(\max)$ must not exceed 0.6 $(\sigma_{YS1}/\sigma_{YS2})K_Q$, where σ_{YS_1} and σ_{YS_2} are the yield strengths at the respective temperatures T_1 and T_2.

NOTE 4—Some materials are too brittle to be fatigue cracked without fracturing. These materials are outside the scope of the present standard test method.

NOTE 5—The K calibration is the relationship of stress-intensity factor K to load and specimen dimensions (1). For example, see 9.1.3 and 9.1.4.

8. Procedure

8.1 *Number of Tests*—It is recommended that at least three replicate tests be made.

NOTE 6—Information on variability of test results will be found in Ref (1) and Ref (8).

8.2 *Specimen Measurement*—All specimen dimensions shall be within the tolerances shown in Figs. 1, 2, and 3.

8.2.1 Measure the thickness, B, to the nearest 0.001 in. (0.025 mm) or 0.1 %, whichever is larger, at not less than three positions between the fatigue-crack tip and the unnotched edge of the specimen, and record the average value.

8.2.2 For a bend specimen, measure the depth, W, and the crack length, a, from the notched edge of the specimen to the far edge, and to the crack front, respectively. For a compact specimen, measure these dimensions from the plane of the centerline of the loading holes (the notched edge is a convenient reference line but the distance from the centerline of the holes to the notched edge must be subtracted to determine W and a). Measure the depth, W, to the nearest 0.001 in. (0.025 mm) or 0.1 %, whichever is larger, at not less than three positions near the notch location, and record the average value.

8.2.3 After fracture measure the crack length to the nearest 0.5 % at the following three positions: at the center of the crack front, and midway between the center and the end of the crack front on each side. Use the average of these three measurements as the crack length to calculate K_Q (see 9.1.3 and 9.1.4). If the difference between any two of the crack length measurements exceeds 5 % of the average, or if any part of the crack front is closer to the machined notch root than 5 % of the average crack length, or 0.05 in. (1.3 mm) minimum, then the test is invalid. Also, if the length of either surface trace of the crack is less than 90 % of the average crack length, as

defined above, the test is invalid.

8.2.4 The crack plane shall be parallel to both the specimen width and thickness directions within ±10 deg.

8.3 *Bend Testing*—Set up the bend test fixture so that the line of action of the applied load shall pass midway between the support roll centers within 1 % of the distance between these centers (for example, within 0.04 in. (1.0 mm) for a 4-in. (100-mm) span). Measure the span to within 0.5 % of nominal length. Locate the specimen with the crack tip midway between the rolls to within 1 % of the span, and square to the roll axes within 2 deg. Seat the displacement gage on the knife edges to maintain registry between knife edges and gage grooves. In the case of attachable knife edges, seat the gage before the knife edge positioning screws are tightened. Load the specimen at a rate such that the rate of increase of stress intensity is within the range 30,000 to 150,000 psi·in.$^{1/2}$/min (0.55 to 2.75 MPa·m$^{1/2}$/s), corresponding to a loading rate for the standard (B = 0.5 W) 1-in. thick specimen between 4000 and 20,000 lbf/min (0.03 to 0.15 kN/s).

8.4 *Compact Testing*—Eliminate friction effects, and also eccentricity of loading introduced by the clevis itself, by adherence to the specified tolerances for the specimen clevis and pins shown in Fig. 2. Eccentricity of loading can also result from misalignment external to the clevis, or from incorrect positioning of the specimen with respect to the center of the clevis opening. Obtain satisfactory alignment by keeping the centerline of the upper and lower loading rods coincident within 0.03 in. (0.76 mm) during the test and by centering the specimen with respect to the clevis opening within 0.03 in. (0.76 mm). Seat the displacement gage in the knife edges to maintain registry between the knife edges and the gage groove. In the case of attachable knife edges, seat the gage before the knife edge positioning screws are tightened. Load specimens at a rate such that the rate of increased of stress intensity is within the range 30,000 to 150,000 psi·in.$^{1/2}$/min (0.55 to 2.75 MPa·m$^{1/2}$/s), corresponding to a loading rate for the standard (B = 0.5 W) 1-in. thick specimen between 4500 and 22,500 lbf/min (0.034 to 0.17 kN/s).

8.5 *Test Record*—Make a test record consisting of an autographic plot of the output of the load-sensing transducer versus the output of the displacement gage. The initial slope of the linear portion shall be between 0.7 and 1.5. It is conventional to plot the load along the vertical axis, as in an ordinary tension test record. Select a combination of load-sensing transducer and autographic recorder so that the load, P_Q, (see 9.1) can be determined from the test record with an accuracy of ±1 %. With any given equipment, the accuracy of readout will be greater the larger the scale of the test record.

8.5.1 Continue the test until the specimen can sustain no further increase in load. In some cases the range of the chart will not be sufficient to include all of the test record up to maximum load, P_{max}. In any case, read the maximum load from the dial of the testing machine (or other accurate indicator) and record it on the chart.

9. Calculation and Interpretation of Results

9.1 *Interpretation of Test Record and Calculation of K_{Ic}*—In order to establish that a valid K_{Ic} has been determined, it is necessary first to calculate a conditional result, K_Q, which involves a construction on the test record, and then to determine whether this result is consistent with the size and yield strength of the specimen according to 7.1. The procedure is as follows:

9.1.1 Draw the secant line OP_5 shown in Fig. 8, through the origin of the test record with slope $(P/v)_5 = 0.95\ (P/v)_o$, where $(P/v)_o$ is the slope of the tangent OA to the initial linear part of the record (Note 7). The load P_Q is then defined as follows: if the load at every point on the record which precedes P_5 is lower than P_5 then P_Q is P_5 (Fig. 8, Type I); if, however, there is a maximum load preceding P_5 which exceeds it, then this maximum load is P_Q (Fig. 8, Types II and III).

NOTE 7—Slight nonlinearity often occurs at the very beginning of a record and should be ignored. However, it is important to establish the initial slope of the record with high precision and therefore it is advisable to minimize this nonlinearity by a preliminary loading and unloading with the maximum load not producing a stress intensity level exceeding that used in the final stage of fatigue cracking.

9.1.2 Calculate the ratio P_{max}/P_Q, where P_{max} is the maximum load that the specimen was able to sustain (see 8.5.1). If this ratio does not exceed 1.10 proceed to calculate K_Q as in 9.1.3 for a bend specimen or 9.1.4 for a compact specimen. If P_{max}/P_Q does exceed 1.10 then the test is not a valid K_{Ic} test because it is then possible that K_Q bears no relation to K_{Ic}. In this case proceed to calculate R_{sb} as in 9.1.6 for a bend specimen, or R_{sc} as in 9.1.7 for a compact specimen. Also, if possible, prepare and test additional specimens with dimensions at least 1.5 times the dimensions of the specimen for which P_{max}/P_Q exceeded 1.10.

9.1.3 For the bend specimen calculate K_Q in units of psi·in.$^{1/2}$ as follows:

$$K_Q = (P_QS/BW^{3/2})[2.9(a/W)^{1/2} - 4.6\,(a/W)^{3/2} + 21.8\,(a/W)^{5/2} - 37.6\,(a/W)^{7/2} + 38.7\,(a/W)^{9/2}]$$

where:

P_Q = load as determined in 9.1.1, lbf,
B = thickness of specimen, in.,
S = span length, in.,
W = depth of specimen, in., and
a = crack length as determined in 8.2.3, in. (Note 8).

9.1.3.1 When using SI units with P_Q in newtons and dimensions in millimetres the above expression for K_Q should be multiplied by 0.001107 to give K_Q in units of MPa·m$^{1/2}$ (note that 1 mm$^{1/2}$ = 0.03162 m$^{1/2}$).

9.1.3.2 To facilitate calculation of K_Q, values of the power series given in brackets in the above expressions are tabulated in the following table for specific values of a/W.

Bend Specimens

a/W	$f(a/W)$	a/W	$f(a/W)$
0.450	2.28	0.500	2.66
0.455	2.32	0.505	2.70
0.460	2.35	0.510	2.75
0.465	2.39	0.505	2.79
0.470	2.42	0.520	2.84
0.475	2.46	0.525	2.89
0.480	2.50	0.530	2.94
0.485	2.54	0.535	2.99
0.490	2.58	0.540	3.04
0.495	2.62	0.545	3.09
		0.550	3.15

NOTE 8—The expression given above was formulated to represent a/W in the range between 0.45 and 0.55 and should not be used outside that range. Stress intensity factors for a wide range of a/W values are given in Ref (11).

9.1.4 For the compact specimen calculate K_Q in units of psi-in.$^{1/2}$ as follows:

$$K_Q = (P_Q/BW^{1/2})[29.6(a/W)^{1/2} - 185.5\,(a/W)^{3/2} + 655.7\,(A/W)^{5/2} - 1017.0\,(a/W)^{7/2} + 638.9\,(a/W)^{9/2}]$$

where:

P_Q = load as determined in 9.1.1, lbf,
B = thickness of specimen, in.,
W = width of specimen, in., and
a = crack length as determined in 8.2.3, in. (Note 8).

9.1.4.1 When using SI units with P_Q in newtons and dimensions in millimetres the above expression for K_Q should be multiplied by 0.001107 to give K_Q in units of MPa.m$^{1/2}$ (note that 1 mm$^{1/2}$ = 0.03162 m$^{1/2}$)

9.1.4.2 To facilitate calculation of K_Q, values of the power series given in brackets in the above expressions are tabulated below for specific values of a/W.

Compact Specimens

a/W	$f(a/W)$	a/W	$f(a/W)$
0.450	8.34	0.500	9.60
0.455	8.45	0.505	9.75
0.460	8.57	0.510	9.90
0.465	8.69	0.515	10.05
0.470	8.81	0.520	10.21
0.475	8.93	0.525	10.37
0.480	9.06	0.530	10.54
0.485	9.19	0.535	10.71
0.490	9.33	0.540	10.89
0.495	9.46	0.545	11.07
		0.550	11.26

9.1.5 Calculate 2.5 $(K_Q/\sigma_{YS})^2$ where σ_{YS} = yield strength in tension (offset = 0.2 %) (see Methods E 8). If this quantity is less than both the thickness and the crack length of the specimen, then K_Q is equal to K_{Ic}. Otherwise it is necessary to use a larger specimen to determine K_{Ic} in order to satisfy this requirement. The dimensions of the larger specimen can be estimated on the basis of K_Q, but should be at least 1.5 times those of the specimen that failed to meet this requirement.

9.1.6 For the bend specimen, calculate the specimen strength ratio (which is dimensionless and has the same value in any consistent system of units):

$$R_{sb} = 6P_{max}\,W/B(W-a)^2\sigma_{YS}$$

where:

P_{max} = maximum load that the specimen could sustain (8.5.1),
B = thickness of specimen,
W = width (depth) of specimen,
a = crack length as determined in 8.2.3,

and

σ_{YS} = yield strength in tension (offset = 0.2 %) (see Methods E 8).

9.1.7 For the compact specimen, calculate the specimen strength ratio (which is dimensionless and has the same value in any consistent system of units):

$$R_{sc} = 2P_{max}(2W+a)/B(W-a)^2\sigma_{YS}$$

where symbols are defined as in 9.1.6.

NOTE 9—The specimen strength ratio R_{sb} or R_{sc}, unlike K_{Ic}, is not a concept of linear elastic fracture mechanics, but is a useful comparative measure of the toughness of materials when the specimens are of the same form and size, and that size is insufficient to provide a valid K_{Ic} determination, but sufficient that the maximum load results from pronounced crack extension prior to plastic instability (see 4.1.3).

9.2 *Crack Plane Orientation*—The fracture toughness of a material usually depends on the orientation and direction of propagation of the crack in relation to the anisotropy of the material, which depends, in turn, on the principal directions of mechanical working or grain flow. The orientation of the crack plane should be identified wherever possible in accordance with the following systems (**10**). In addition, the product form should be identified (for example, straight rolled plate, cross rolled plate, pancake forging, etc.).

9.2.1 For rectangular sections the reference directions are identified as in Figs. 9 and 10 which give examples for a rolled plate. The same system would be useful for sheet, extrusions, and forgings with nonsymmetrical grain flow.

L = direction of principal deformation (maximum grain flow),

T = direction of least deformation, and

S = third orthogonal direction

9.2.1.1 Using a two letter code, the first letter designates the *direction normal* to the crack plane, and the second letter the *expected direction of crack propagation.* For example, in Fig. 9 the T-L specimen has a fracture plane whose normal is in the width direction of a plate and an expected direction of crack propagation coincident with the direction of maximum grain flow or longitudinal direction of the plate.

9.2.1.2 For specimens which are tilted in respect to two of the reference axes, Fig. 10, the orientation is identified by a three-letter code. The code L-TS, for example, means that the crack plane is perpendicular to the direction of principal deformation (L direction), and the expected fracture direction is intermediate between T and S. The code TS-L means the crack plane is perpendicular to a direction intermediate between T and S, and the expected fracture direction is in the L direction.

9.2.2 For certain cylindrical sections where the direction of principal deformation is parallel to the longitudinal axis of the cylinder, the reference directions are identified as in Fig. 11 which gives examples for a drawn bar. The same system would be useful for extrusions or forged parts having circular cross section.

L = direction of maximum grain flow,

R = radial direction, and

C = circumferential or tangential direction.

9.3 *Fracture Appearance*—The appearance of the fracture is valuable supplementary information and shall be noted for each specimen. Common types of fracture appearance are shown in Fig. 12. For fractures of Types (a) or (b), measure the average width, f, of the central flat fracture area, and note and record the proportion of oblique fracture per unit thickness $(B - f)/B$. Make this measurement at a location midway between the crack tip and the unnotched edge of the specimen. Report fractures of Type (c) as full oblique fractures.

10. Report

10.1 The report shall include the following for each specimen tested:

10.1.1 Thickness, B,

10.1.2 Depth, W,

10.1.3 Fatigue precracking conditions in terms of:

10.1.3.1 Maximum stress intensity, K_f(max) and number of cycles for terminal fatigue crack extension over a length at least 2.5 % of the over-all length of notch plus crack, and

10.1.3.2 The stress intensity range for terminal crack extension,

10.1.4 Crack length measurements,

10.1.4.1 At center of crack front,

10.1.4.2 Midway between the center and the end of the crack front on each side, and

10.1.4.3 At each surface.

10.1.5 Test temperature,

10.1.6 Relative humidity as determined by

Method E 337.[4]

10.1.7 Loading rate in terms of K_I (change in stress intensity factor per unit time) (Ref(2)).

10.1.8 Load-displacement record and associated calculations,

10.1.9 Crack plane orientation,

10.1.10 Fracture appearance,

10.1.11 Yield strength (offset = 0.2 %) as determined by Methods E 8,

10.1.12 K_{Ic}, or K_Q followed by the parenthetical statement: "invalid according to section(s) . . . . . of ASTM Method E 399", and

10.1.13 R_{sb} for a bend specimen, or R_{sc} for a compact specimen.

10.1.14 P_{max}/P_Q.

References

(1) Brown, W. F., Jr., and Srawley, J. E., "Plane Strain Crack Toughness Testing of High Strength Metallic Materials," *ASTM STP 410*, ASTTA, Am. Soc. Testing Mats., 1966.

(2) Srawley, J. E., "Plane Strain Fracture Toughness," *Fracture*, Vol 4, Ch. 2, p. 45-68.

(3) "Fracture Toughness Testing and Its Applications," *ASTM STP 381*, ASTTA, Am. Soc. Testing Mats., April 1965.

(4) Jones, M. H., Bubsey, R. T., and Brown, W. F., Jr., "Clevis Design for Compact Tension Specimens Used in K_{Ic} Testing," *Materials Research and Standards*, MIRSA, Am. Soc. Testing Mats., Vol 9, No. 5, May 1969.

(5) Wessel, E. T., "State of the Art of the WOL Specimen for K_{Ic} Fracture Toughness Testing," *Engineering Fracture Mechanics*, Vol 1, No. 1, January 1968.

(6) Srawley, J. E., Jones, M. H., and Brown, W. F., Jr., "Determination of Plane Strain Fracture Toughness," *Materials Research and Standards*, MIRSA, Am. Soc. Testing Mats., Vol 7, No. 6, June 1967, p. 262.

(7) Fisher, D. M., and Repko, A. J., "Note on Inclinaion of Fatigue Cracks in Plane Strain Fracture Toughness Test Specimens," *Materials Research and Standards*, MIRSA, Am. Soc. Testing Mats., Vol 9, No. 4, April 1969.

(8) Heyer, R. H., and McCabe, D. E., "Evaluation of a Method of Test for Plane-Strain Fracture Toughness Using A Bend Specimen," Research Laboratory, Armco Steel Corp., Middletown, Ohio.

(9) Fisher, D. M., Bubsey, R. T., and Srawley, J. E., "Design and Use of a Displacement Gage for Crack Extension Measurements," *NASA TN-D-3724*, NASNA, Nat. Aeronautics and Space Administration, 1966.

(10) Goode, R. J., "Identification of Fracture Plane Orientation," *Materials Research and Standards*, MIRSA, Am. Soc. Testing Mats., Vol 12, No. 9, September 1972.

(11) Srawley, J. E., and Gross, B., "Stress Intensity Factors for Bend and Compact Specimens," *Engineering Fracture Mechanics*, Vol 4, September 1972.

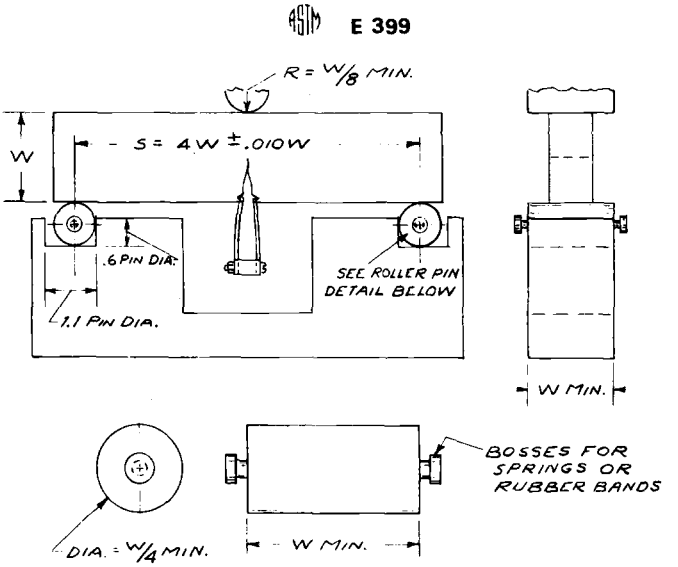

NOTE 1—Dimensions are in inches.
NOTE 2—For 1-in. and 2-in. deep specimens: proportion accordingly for other specimen sizes.
NOTE 3—Roller pins and specimen contact surface of loading ram must be parallel to each other within 0.002 W.

Metric Equivalents

in.	mm	in.	mm
0.2	5.1	1.5	38
0.3	7.6	1.505	38.23
0.6	15.0	2.0	51
0.75	19.1	2.6	66
0.998	25.35	3.495	88.77
1.0	25.0	3.505	89.03
1.002	25.45	3.6	91
1.10	27.9	4.0	100
1.495	37.97		

FIG. 1 Bend Test Fixture Design.

ASTM E 399

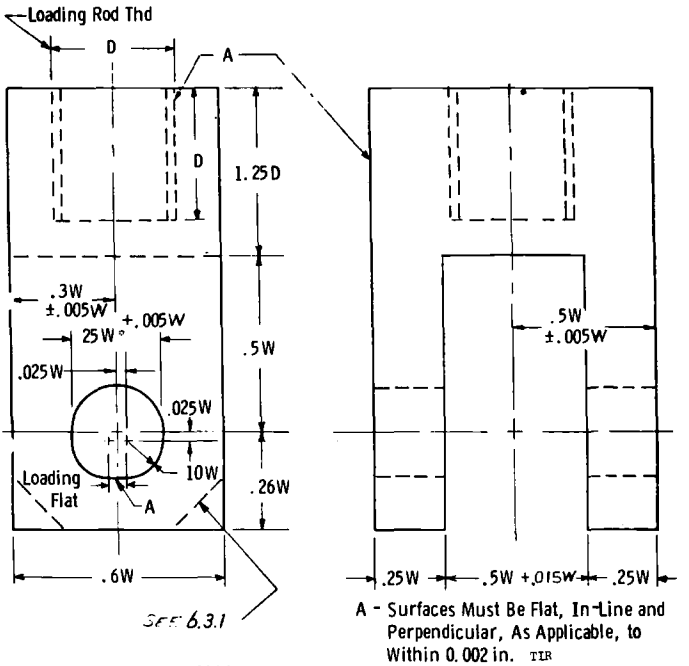

NOTE 1—Dimensions are in inches (0.005 in. = 0.13 mm)

NOTE 2—Pin diameter = 0.24 $W^{+0.000}_{-0.005W}$. For specimens with $\sigma_{YS} > 200$ ksi (1379MPa) the holes may be 0.3 $W^{+0.005W}_{-0.000}$ diameter and the pin diameter 0.288 $W^{+0.000}_{-0.005W}$

FIG. 2 Tension Testing Clevis.

E 399

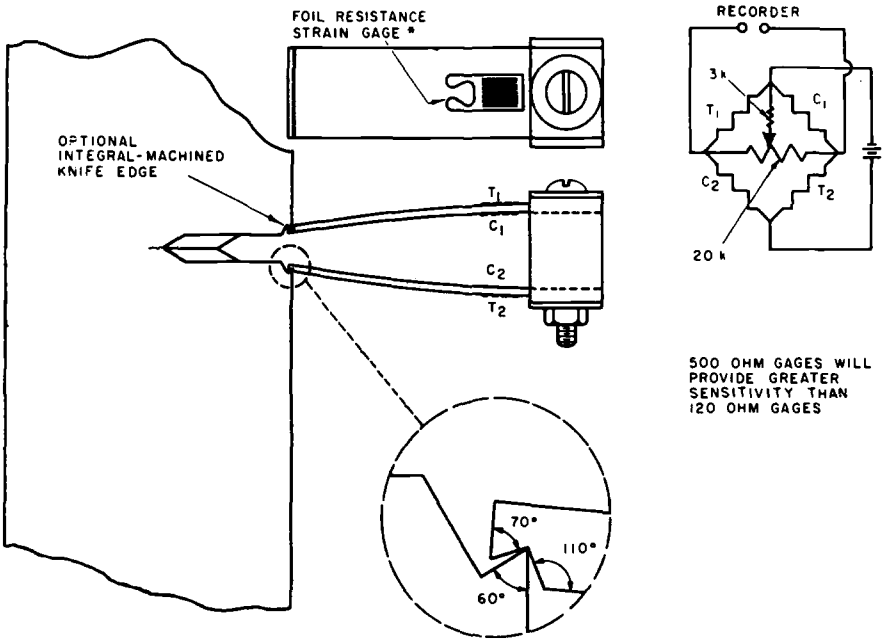

NOTE—Gage details are given in the Annex.

FIG. 3 Double-Cantilever Clip-In Displacement Gage and Method of Mounting.

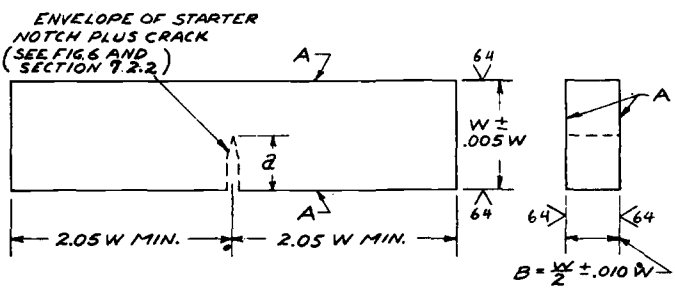

NOTE 1—*A* surfaces shall be perpendicular and parallel as applicable to within 0.001W TIR
NOTE 2—Crack starter shall be perpendicular to specimen length and thickness to within ± 2 deg.
NOTE 3—Integral or attachable knife edges for clip gage attachment to the crack may be used (see Fig. 7 and 7.2.5).

Metric Equivalents

in.	0.002	0.005	0.010
mm	0.05	0.13	0.25

FIG. 4 Bend Specimen—Standard Proportions and Tolerances (not a working drawing).

E 399

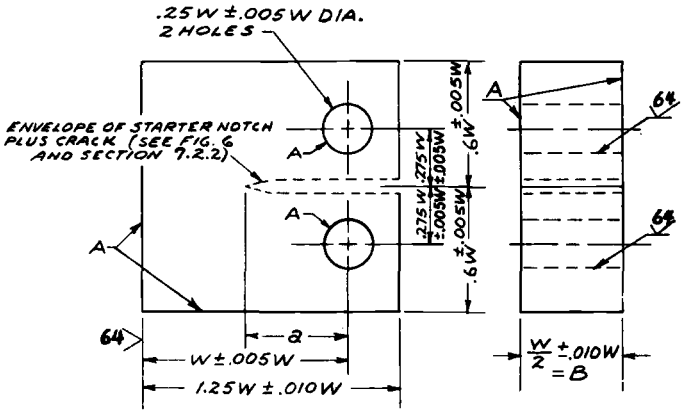

NOTE 1—*A* surfaces shall be perpendicular and parallel as applicable to within 0.002*W* TIR.

NOTE 2—The intersection of the crack started tips with the two specimen faces shall be equally distant from the top and bottom edges of the specimen within 0.0005 *W*.

NOTE 3—Integral or attachable knife edges for clip gage attachment to the crack mouth may be used (see Fig. 7 and 7.2.5).

Metric Equivalents

in.	0.002	0.005	0.010
mm	0.05	0.13	0.25

FIG. 5 Compact Tension Specimen—Standard Proportions and Tolerances (not a working drawing).

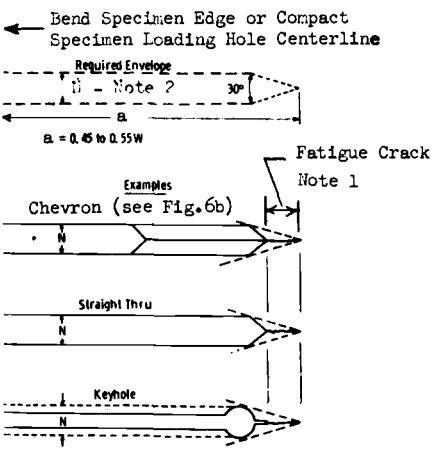

NOTE 1—Fatigue crack shall be not less than 0.05 *a*, nor less than 0.05 in. (1.3 mm).

NOTE 2—*N* need not be less than 1/16 in. (1.5 mm) but must not exceed *W*/10.

FIG. 6(a) Envelope for Crack-Starter Notches and Fatigue Cracks with Examples of Various Types of Notches Tipped with Fatigue Cracks.

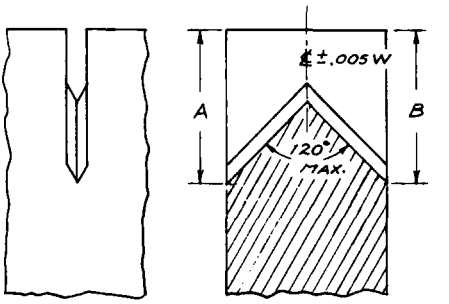

NOTE 1—*A* = *B* to within 0.010 *W*

NOTE 2—Cutter tip angle 90 deg max

NOTE 3—Radius at notch bottom shall be 0.010 in. (0.25 mm) or less

NOTE 4—Crack starter shall be perpendicular to specimen length and thickness to within ±2 deg.

FIG. 6(b) Chevron Notch Crack Starter.

E 399

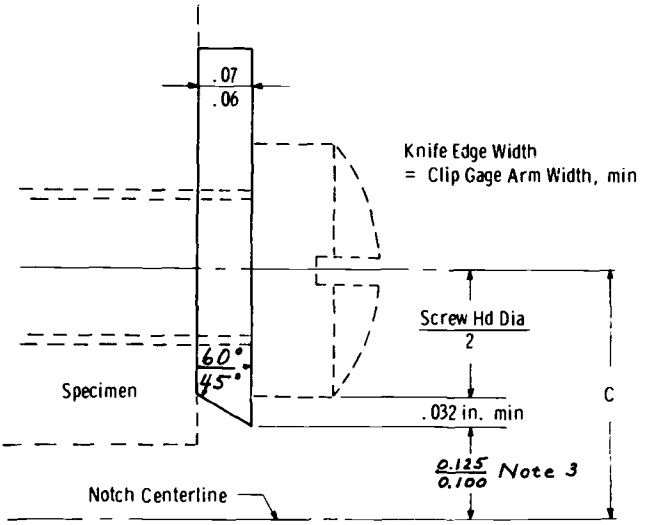

NOTE 1—Dimensions are in inches.
NOTE 2—Effective gage length = 2C + Screw Thread Diameter ≤ $W/2$.
NOTE 3—Dimension shown corresponds to clip gage spacer block dimension in Annex A1.

Metric Equivalents

in.	0.032	0.06	0.07	0.100	0.125
mm	0.81	1.5	1.8	2.54	3.18

FIG. 7(a) Example of Attachable Knife Edge Design Based on the Gage Length Requirements for the Bend Specimen (see 7.2.5).

E 399

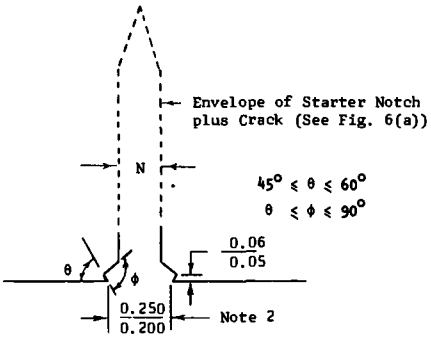

NOTE 1—Dimensions are in inches.
NOTE 2—Gage length shown corresponds to clip gage spacer block dimensions shown in Annex A1, but see 7.2.5 also.

Metric Equivalents

in.	0.050	0.060	0.200	0.250
mm	1.3	1.5	5.1	6.4

FIG. 7(b) Integral Knife Edges.

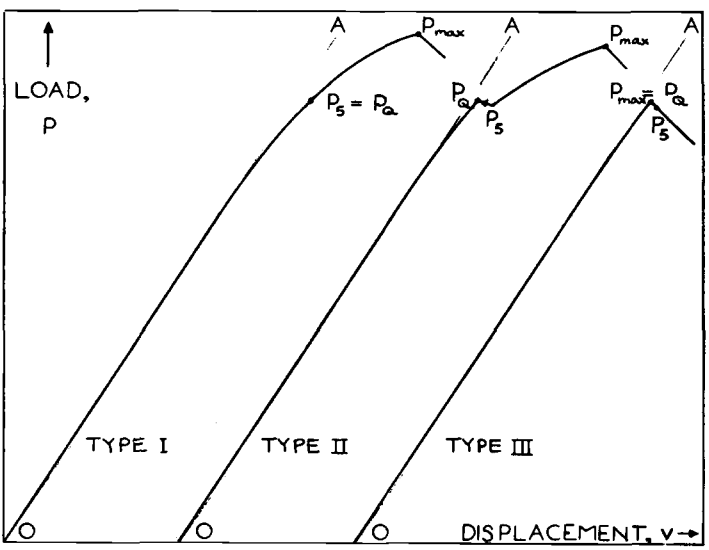

FIG. 8 Principal Types of Load - Displacement Records.

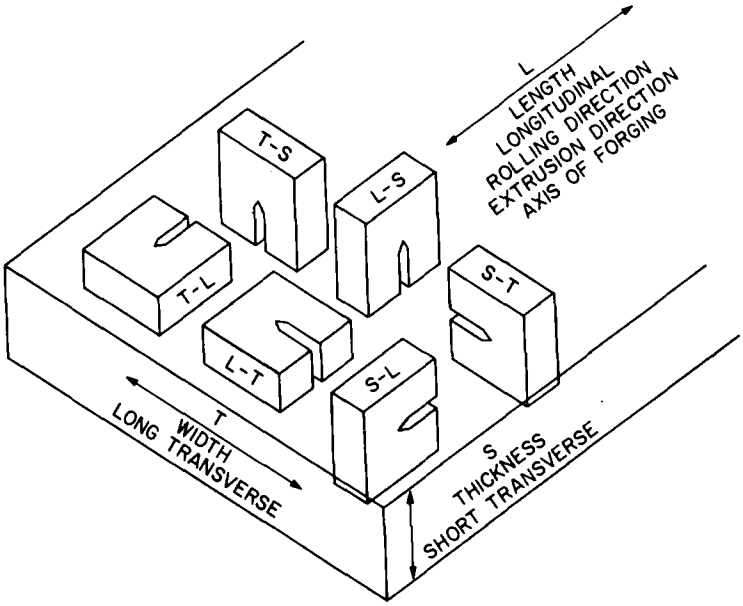

FIG. 9 Crack Plane Orientation Identification Code for Rolled Plate.

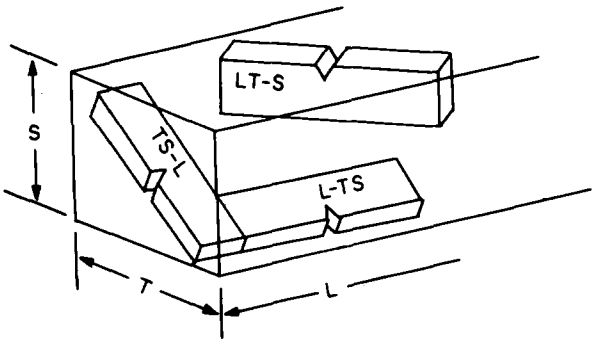

FIG. 10 Crack Plane Orientation Identification Code for Specimens Tilted with Respect to Reference Directions.

E 399

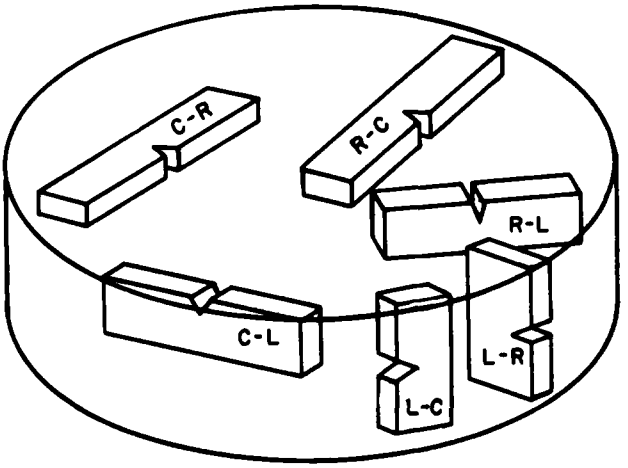

FIG. 11 Crack Plane Orientation Identification Code for Drawn Bars.

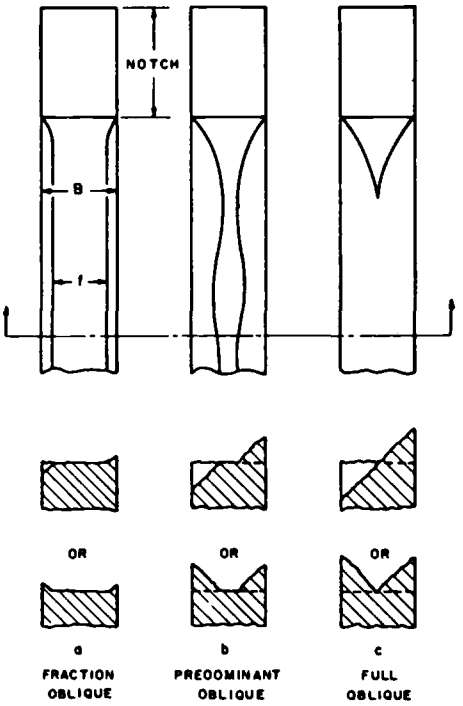

FIG. 12 Common Types of Fracture Appearance.

ANNEX

A1. DOUBLE CANTILEVER CLIP-IN DISPLACEMENT GAGE

A1.1 The gage consists of two cantilever beams and a spacer block which are clamped together with a single nut and bolt, as shown in Fig. 3. Electrical-resistance strain gages are cemented to the tension and compression surfaces of each beam, and are connected as a Wheatstone bridge incorporating a suitable balancing resistor. The material for the gage beams should have a high ratio of yield strength to elastic modulus, and titanium alloy 13V-11Cr-3Al in the solution treated condition has been found very satisfactory for this purpose. If a material of different modulus is substituted, the spring constant of the assembly will change correspondingly, but the other characteristics will not be affected. Detailed dimensions for the beams and spacer block are given in Figs. A1 and A2. For these particular dimensions the linear range is from 0.15 to 0.30 in. (3.8 to 7.6 mm) and the recommended gage length is from 0.20 to 0.25 in. (5.1 to 6.3 mm). The clip gage can be altered to adapt it to a different gage length by substituting a spacer block of appropriate height. As discussed in 6.4.1 the precision of the gage corresponds to a maximum deviation of ±0.0001 in. (0.0025 mm) of the displacement readings from a least-squares-best-fit straight line through the data. Further details concerning design, construction and use of these gages are given in Ref(9).

E 399

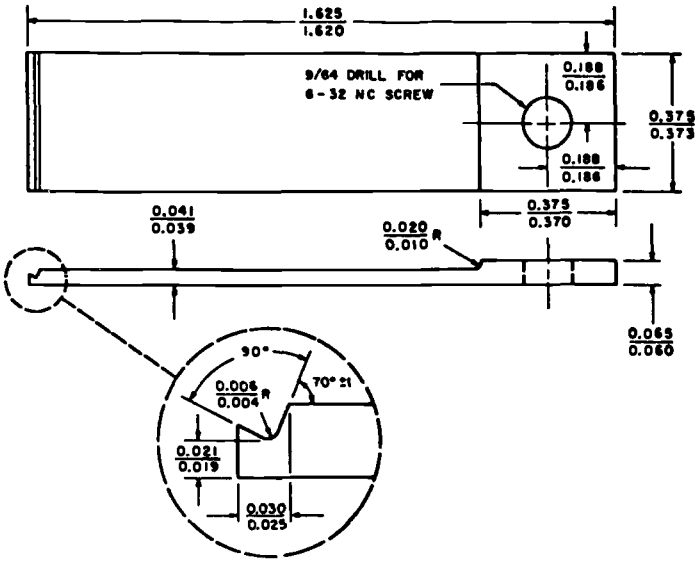

NOTE—Dimensions are in inches.

Metric Equivalents

in.	mm	in.	mm
0.004	0.10	0.060	1.52
0.006	0.15	0.065	1.65
0.010	0.25	9/64	3.6
0.019	0.48	0.186	4.72
0.020	0.51	0.188	4.78
0.021	0.53	0.370	9.40
0.025	0.64	0.373	9.47
0.030	0.76	0.375	9.52
0.039	0.99	1.620	41.15
0.041	1.04	1.625	41.28

FIG. A1 Beams for Double-Cantilever Displacement Gage.

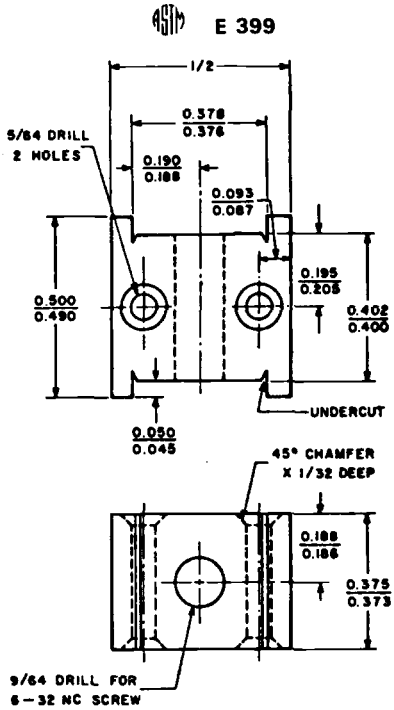

NOTE—Dimensions are in inches

Metric Equivalents

in.	mm	in.	mm
1/32	0.80	0.195	4.95
0.045	1.14	0.205	5.21
0.050	1.27	0.373	9.47
3/64	2.00	0.375	9.52
0.087	2.21	0.376	9.55
0.093	2.36	0.378	9.60
0.125	3.18	0.400	10.16
9/64	3.60	0.402	10.21
0.186	4.72	0.490	12.45
0.188	4.78	1/2	12.70
0.190	4.83	0.500	12.70

FIG. A2 Spacer Block for Double-Cantilever Displacement Gage.

The American Society for Testing and Materials takes no position respecting the validity of any patent rights asserted in connection with any item mentioned in this standard. Users of this standard are expressly advised that determination of the validity of any such patent rights, and the risk of infringement of such rights, is entirely their own responsibility.

APPENDIX III

Designation: E 561 - 76 T

Tentative Recommended Practice for *R*-CURVE DETERMINATION[1]

This Tentative Recommended Practice has been approved by the sponsoring committee and accepted by the Society in accordance with established procedures, for use pending adoption as standard. Suggestions for revisions should be addressed to the Society at 1916 Race St., Philadelphia, Pa. 19103.

1. Scope

1.1 This recommended practice covers the determination of resistance to fracturing of metallic materials by *R*-curves using either the center-cracked tension panel (CCT), the compact specimen (CS), or the crack-line-wedge-loaded specimen (CLWL), to deliver crack-extension force to the material. An *R*-curve is a continuous record of toughness development in terms of K_R plotted against crack extension in the material as a crack is driven under a continuously increased stress intensity factor, K.

1.2 Materials that can be tested for *R*-curve development are not limited by strength, thickness, or toughness, so long as specimens are of sufficient size to remain predominantly elastic throughout the duration of the test.

1.3 Specimens of standard proportions are required, but size is variable, to be adjusted for yield strength and toughness of the materials.

1.4 Only three of the many possible specimen types that could be used to develop *R*-curves are covered in this recommended practice.

2. Applicable Documents

2.1 *ASTM Standards:*

E 338, Sharp-Notch Tension Testing of High-Strength Sheet Materials[2]

E 399, Test for Plane-Strain Fracture Toughness of Metallic Materials[2]

3. Summary of Practice

3.1 During slow-stable fracturing, the developing crack growth resistance, K_R, is equal to the crack-extension force, K (Note 1), applied to the specimen. The crack is driven forward by increments of increased load or displacement. Measurements are made at each increment for calculation of K values which are individual data points lying on the *R*-curve for the material.

NOTE 1—Extension force may be expressed in terms of G if desired through the following conversion: $G = K^2/E$. The use of K is presently preferred.

3.2 The crack starter is a low-stress-level fatigue crack.

3.3 Methods of measuring crack growth and of making plastic-zone corrections to the physical crack length are prescribed. Expressions for the calculation of crack-extension force are shown.

4. Significance

4.1 *R*-curves characterize the resistance to fracture of materials during incremental slow-stable crack extension and result from growth of the plastic zone as the crack extends from a sharp notch. They provide a record of the toughness development as a crack is driven stably under increasing crack-extension forces. They are dependent upon specimen thickness, temperature, and strain rate.

4.2 For an untested geometry, the *R*-curve can be matched with the crack-extension force curves to estimate the load necessary to cause unstable crack propagation. (See Fig. 1 (**1**)[3].) In making this estimate, *R*-curves are re-

---

[1] This recommended practice is under the jurisdiction of ASTM Committee E-24 on Fracture Testing of Metals.

Current edition approved Nov. 28, 1975, and April 30, 1976. Published July 1976. Originally published as a proposed recommended practice in 1974.

[2] *Annual Book of ASTM Standards,* Part 10.

[3] The boldface numbers in parentheses refer to the list of references appended to this recommended practice.

garded as though they are independent of starting crack length, a_0, and the specimen configuration in which they are developed. They appear to be a function of crack extension, Δa, only (**2**). To predict crack instability in a component, the *R*-curve may be positioned as in Fig. 1 so that the origin coincides with the assumed initial crack length, a_0. Crack-extension force curves for a given configuration can be generated by assuming applied loads or stresses and calculating crack-extension force, K, as a function of crack length using the appropriate expression for K of the configuration. The unique curve that develops tangency with the *R*-curve defines the critical load or stress that will cause onset of unstable fracturing.

4.3 If the *K*-gradient (slope of the crack-extension force curve) of the specimen chosen to develop an *R*-curve has negative characteristics (Note 2), as in the crack-line-wedge-loaded specimen of this method, it may be possible to drive the crack until a maximum or plateau toughness level is reached (**3, 4**). When a specimen with positive *K*-gradient characteristics (Note 3) is used, the extent of the *R*-curve which can be developed is terminated when the crack becomes unstable.

NOTE 2—Fixed displacement in crack-line-loaded specimens results in a decrease of K with crack extension.

NOTE 3—With load control, K usually increases with crack extension.

5. Definitions

5.1 *R-curve*—a plot of crack growth resistance in a material as a function of physical or effective crack extension.

5.2 K_R—the crack growth resistance expressed in units corresponding to K (ksi$\sqrt{\text{in.}}$) (MN·m$^{-3/2}$).

5.3 *stress intensity factor*, K (FL$^{-3/2}$)—a measure of the stress-field intensity near the tip of an ideal crack in a linear-elastic solid when the crack surfaces are displaced in the opening mode, Mode I (**5**).

5.4 *plane-stress fracture toughness*, K_c—the value of K_R at the instability condition determined from the tangency between the *R*-curve and the critical crack-extension force curve of the specimen.

5.5 *fixed load or fixed displacement crack-extension force curves*—curves obtained from a fracture mechanics analysis for the test configuration; assuming a fixed applied load or displacement and generating a curve of K versus the effective crack size with crack size as the independent variable.

5.6 *displacement*, v—the distance that a chosen measurement point on the specimen displaces normal to the crack plane. Total displacement as measured by clip gages or other devices spanning the crack is defined as $2v$. Measurement points on CLWL and CS specimens are identified as locations $V1$ and $V2$.

5.7 *effective crack length factor*, a_e—the physical crack length, including extension by stable growth, plus plastic-zone adjustment.

5.8 *crack length*, a—a generalized crack size factor used in computations of K. The effective crack size factor, a_e, is taken as equal to a in the expressions for K given in this method. In CS and CLWL specimens, a is measured from the line connecting the bearing points of opposing loads. In center-cracked panels, a is one half the total crack length and is referenced from a line normal to and bisecting the central crack.

6. Apparatus

6.1 *Grips and Fixtures for CCT Specimens*—In the center-cracked tension tests, the grip fixtures are designed to develop uniform load distribution on the specimen. To ensure uniform stress entering the crack plane, the length of the specimen between the innermost loading pins shall be at least two specimen widths, $2W$. For panels wider than 12 in. (305 mm), multiple-pin grips are mandatory and the requirement is relaxed to $1.5W$. A typical grip arrangement shown in Fig. 2 has proven useful. Pin or gimbal connections are located between the grips and loading machine to aid the symmetry of loading. If extra-heavy-gage ultra-high-strength materials are to be tested, the suitability of the grip arrangement may be checked using the *AISC Steel Construction Manual*.

6.2 *Grips and Fixtures for Compact Specimens*—The grips and fixtures described in Method E 399 are recommended for *R*-curve testing where CS-type specimens are loaded in tension.

6.3 *Fixtures for Crack-Line-Wedge-Loading (CLWL):*

6.3.1 Where wedge loading is used, a low-taper-angle wedge with a polished finish and split-pin arrangement shown in Fig. 3 is used. Sketches of a segmented split-pin system which has proved effective for maintaining the load line independent of rotation of the specimen arms are provided in Fig. 4. It has been found convenient to use a wedge whose included angle is 3 deg. With proper lubrication and system alignment a mechanical advantage of five can be expected. Thus, a loading machine producing $^1/_5$ the maximum expected test load will be adequate. The wedge must be long enough to develop the maximum expected crack-opening displacement. The maximum required stroke can be calculated from the maximum expected displacement $2v$, using the $EB2v/P$ values found in Table 2, the maximum expected K level in the test, and the wedge angle.

6.3.2 The wedge-load blocks which drive the load sectors are constrained on top (not shown) and bottom to restrict motion to a plane parallel to the plane of the specimen. This allows the load to be applied or released conveniently without driving the load blocks and sectors out of the hole in the specimen. The wedge-load blocks are designed so that line contact exists between the wedge-load block and the load sector at a point that falls on the load line of the specimen. This enables the load sectors to rotate as the wedge is driven and the original load line is maintained. Any air- or oil-hardening tool steel will be suitable for making the wedge and wedge-load blocks. A maraging 300-grade steel should be used for the load sectors. The diameter of the sectors shall be slightly smaller (nominally $^1/_{32}$ in. (0.79 mm)) than the diameter of the drilled hole in the specimen.

6.4 *Face Plates to Prevent Sheet Buckling* – Buckling may develop in unsupported specimens depending upon the sheet thickness, material toughness, crack length, and specimen size. Buckling seriously affects the validity of a K analysis and is particularly troublesome when using compliance techniques to determine effective crack length. It is therefore required that rigid face plates be affixed to the CCT, CS, and CLWL specimens in critical regions. A procedure for the detection of buckling using autographic records is described in 8.6.

6.4.1 For the CCT specimen, the buckling restraints shall be attached to the central portion of the specimen. The plates shall be so designed to prevent sheet kinking about the crack plane and sheet wrinkling along the specimen width.

6.4.2 For CS and CLWL specimens, the portion of the specimen arms and back edge which are in compression should be restrained from buckling. For sheet specimens it is convenient to use a base plate and cover plate with ports cut in the cover plate at appropriate locations for attaching clip gages and for crack length observations.

6.4.3 Lubrication shall be provided between the face plates and specimen. Care shall be taken to keep lubricants out of the crack to avoid possible crack acceleration due to aggressive attack. Sheet TFE-fluorocarbon or heavy oils or both can be used. The initial clamping forces between opposing plates need not be excessive, but of the order of a few pounds.

6.5 *Displacement Gages* – Displacement gages are used to accurately measure the crack-opening displacement across the crack at a preselected location and span. In testing small CLWL and CS specimens, the gage recommended in Method E 399 may have a sufficient linear working range to be used. However, in testing larger specimens where W is larger than 5 in. (127 mm), displacements may be of such a magnitude that gages with greater working ranges of the type shown in Fig. 5 are needed. The use of point contacts eliminates error in the readings from the hinge-type rotation of CS and CLWL specimens. The precision of all types of gages shall be checked in accordance with the calibration procedure outlined in 6.4.1 of Method E 399. In addition, absolute accuracy within 2 % over the working range of the gage is required for use with compliance measurements. The gages shall be recalibrated periodically.

6.5.1 A recommended gage for use with CCT panels with a No. 13 drilled hole at the midpoint of the crack is shown in Fig. 6 (**6**), and a detail of components is shown in Fig. 6a. Proper construction techniques and required electronic procedures are specified in

Method E 399.

6.5.2 Other types of gages used over different gage spans are equally acceptable provided the precision and accuracy requirements are retained. The conventional clip gage of Method E 399 may be used with screw attachments spanning the crack at a chosen interval, $2Y$. In CCT tests, it is necessary to be cautious in choosing the proper compliance calibration curve to go with such arrangements because displacement is a function of Y/W.

6.6 *Optical Equipment*—If the material being tested is sufficiently thin so that the crack-tip contour does not vary significantly from surface to midthickness, crack growth can be followed by surface observations using optical equipment. If load is sustained at given increments so that the crack stabilizes, crack length can be determined within 0.01 in. (0.2 mm) using a 30 to 50-power traveling-stage microscope. A movie camera recording system may be useful. A common technique is to record simultaneously load and crack growth using two synchronized cameras.

6.7 *Other Equipment*—Other methods of measuring crack length are available, such as eddy-current probes, which are most useful with nonferrous material, or electrical-resistance measurements, where the extension of the crack is determined from electrical potential differences.

7. Specimen Configuration, Dimensions, and Preparation

7.1 *Specimen Size*—In order for the K analysis to be valid, the specimen ligaments in the plane of the crack must be predominantly elastic at all values of applied load.

7.2 For the CCT panel, the net section stress based on the effective crack size must be less than the yield strength of the material. The CCT panel width, W, is optional provided the requirement of 7.1 is observed. The needed width to be below material yield may be estimated from the maximum expected plastic-zone size, r_Y (see 9.1.4), which is directly proportional to the square of the material toughness-to-yield strength ratio. As a guide, a specimen $27r_Y$ wide and 1/3 notched is expected to fail at a net section stress equal to the yield strength (7). It therefore is desirable to have an estimate of the maximum K expected in the test before designing the specimen. As an aid, the following table lists minimum recommended CCT sizes for assumed K_{max}-to-yield strength ratios.

K_{max}/σ_Y	Width, in. (mm)	$2a_0$, in. (mm)	Length, in. (mm)[a]
0.5	3.0(76)	1.0(25)	9(229)[b]
1.00	6.0(152)	2.0(51)	12(305)
1.50	12.0(305)	4.0(102)	24(610)
2.00	20.0(508)	6.7(170)	30(762)
3.00	48.0(1219)	16.0(406)	72(1829)

[a] Specimen length between grips of CCT specimens is nominally $2W$ with W less than or equal to 12 in. (305 mm), and $1.5W$ for all W greater than 12 in.

[b] Pin-loaded specimen of Method E 338.

7.3 The recommended CS specimen is shown in Fig. 7*a*. Crack-opening displacement is measured at a point $0.1576W \pm 0.0006W$ in advance of the center line of the loading pins. Alternative location of the gage is permitted but displacement values must be linearly extrapolated to the load line or to $0.1576W$ in order to use the values given in Table 2 for compliance measurement. Span of the gage is not critical so long as it is less than $W/4$.

7.4 The recommended CLWL specimen is shown in Fig. 7*b*. Hole size is proportioned according to specimen size. Some small amount of specimen brinelling at the hole can be tolerated. Clip gage placement is restricted to $0.1576W \pm 0.0006W$ in front and $0.303W \pm 0.0006W$ behind the load line. Recommended gage span varies with specimen size as shown in the figure.

7.5 In order for a result to be considered valid for CS and CLWL specimens in accordance with this recommended practice, it is required that the remaining uncracked ligament at the end of the test be at least equal to $4/\pi\ (K_{max}/\sigma_Y)^2$ where K_{max} is the maximum K level in a test and σ_Y is the 0.2 % offset yield strength of the material. The initial crack length in CS and CLWL specimens shall be between 0.35 to 0.45 times specimen width.

7.6 *Starting Notch*—The machined starter slot for any of the recommended specimens may be made by electrical-discharge machining, end milling, or saw cutting.

7.6.1 For the CCT specimen, the machined notch shall be 30 to 35 % of W and shall be centered with respect to specimen width within $0.002W$. It is advisable to have

root radii at the ends of the slots of 0.003 in. (0.08 mm) or less to facilitate fatigue cracking. The starter slot must be extended by fatigue cracks not less than 0.05 in. (1.3 mm) in length (see Note 4). The slot must lie within an envelope described by Fig. 8.

7.6.2 For the CS specimen, Fig. 9 shows the allowable notch types and envelope sizes. The machined slots must be extended by fatigue cracks not less than 0.05 in. (1.3 mm) in length.

NOTE 4—Fatigue cracks may be omitted only if it can be shown that the machined notch root radius effectively simulates the sharpness of a fatigue starter crack.

7.7 In fatigue cracking, the minimum-to-maximum load ratio can be chosen through experience. In CCT specimens, the maximum stress in the net section shall not be greater than 50 % of the yield stress. In CS and CLWL specimens, the maximum load in fatigue shall not develop strength ratios greater than 0.5 as calculated in accordance with 9.1.7 of Method E 399. Typically, maximum nominal stresses in fatigue cracking should be between 10 to 40 % of material yield strength.

8. Procedure

8.1 *Measurements*—Measure material thickness, B, to ± 1 % of B at four locations near the crack plane. Measure specimen width, W, accurate to ± 0.5 % of W.

8.2 *Number of Tests*—Replicate R-curves can be expected to vary as do other properties in mechanical tests such as Charpy-V energies or tensile properties. A curve plotted from a single determination may be a smoothly increasing function of crack extension, giving the impression that the single determination is an accurate representation. This is not necessarily so; make at least one additional confirming test.

8.3 *Loading Procedure*—Load the CCT, CS, and CLWL specimens incrementally, allowing time between steps for the crack to stabilize before measuring load and crack length (see Note 5). Cracks stabilize in most materials within seconds of stopping the loading. However, when stopping near an instability condition, the crack may take several minutes to stabilize, depending upon the stiffness of the loading frame and other factors.

NOTE 5—If autographic instrumentation is used, it is permitted to monitor load versus crack extension continuously under monotonic loading. Load rate must be slow enough so as not to introduce strain rate effects into the R-curve. Static K_R cannot be determined when the crack is steadily creeping or accelerating at or near instability.

8.3.1 *Number of Data Points*—While R-curves can be developed with as few as four or five data points, ten to fifteen give improved confidence, and tougher materials usually require more data points.

8.4 *Physical Crack-Length Measurement*—Measure the physical crack length accurately to 0.01 in. (0.2 mm) at each step using suitable measuring devices described in 6.6 and 6.7. Physical crack length can also be measured with compliance techniques by partial unloading of the specimen after each increment, a technique described in 10.4. Adjust the physical crack length for plastic-zone, r_Y, to obtain effective crack length for calculating K.

8.4.1 In CLWL tests where the physical crack length is measured, determine the applied load or K from the relationship of Table 2 using an r_Y adjustment to crack length to enter the table. Since r_Y is a function of K, an iteration procedure may be necessary.

8.5 *Effective Crack-Length Measurement*—Compliance measurements, $2v/P$, made during the loading of specimens, can be used to determine effective crack length, a_e, directly. The crack is automatically plastic-zone corrected and these values can be used directly in the expressions for K.

8.5.1 Effective crack length can be determined directly in CS and CLWL specimens using a double compliance technique. By determining the displacements at two different locations, $V1$ and $V2$, along the crack line, as shown in Fig. 7*b*, an effective crack length-to-width ratio, a_e/W, can be found from the displacement ratio $2v1/2v2$ using Table 1. It is convenient to plot autographically $2v1$ versus $2v2$ on an X-Y recorder at 100× and 200×, respectively. The load, P, can be calculated using a_e and displacement at $V1$ in conventional compliance relationships appearing in Table 2. In continuous X-Y plots, the wedge direction or load can be reversed at appropriate intervals to determine return slope $2\Delta v1/$

$2\Delta v2$, which corresponds to physical crack length, using Table 1. In wedge systems, use a restraining jig to prevent withdrawal of the split pins along with the wedge.

8.6 *Detection of Buckling*—If compliance instrumentation is used, it is possible to determine when the specimen has developed undesirable buckling. The detection technique involves periodic partial unloading of the specimen as is shown schematically in Figs. 10 and 11. The initial part of the test record should have a linear portion which can be substantially retraced upon partial unloading. Likewise, should buckling or friction problems develop at some later stage in the test, the unloading and reloading slopes will tend to diverge. If the slopes differ by more than 2 % or if one or both have no linear range, then buckling or friction is present which is sufficient to cause significant error in compliance indicated crack lengths. Added confidence can be obtained by comparing the crack lengths predicted from return slopes, to physical crack length indicated with other more direct measurement methods.

8.7 Difficulties in the interpretation of test records will be encountered if the specimens are not flat prior to testing and if the plates contain regions of residual stress that are not negligible on a thickness average basis.

8.8 *CCT Specimen Testing*—Carefully align the specimens in the testing machine to eliminate eccentricity of loading. Misalignment can result in uncontrolled or spurious stress distribution in the specimen, which could be troublesome, particularly if compliance measurements are used to determine effective crack length. Fixtures for measuring crack growth may be affixed to the specimen after applying a light preload. Starting crack length in a CCT specimen is nominally 30 to 35 % of W, as established in 7.6.1. Measure this to the nearest 0.01 in. (0.2 mm).

8.9 *CS and CLWL Testing*—Starting crack length in a CS and CLWL specimen is nominally 35 to 45 % of W, as set forth in 7.5. The stress distribution in these crack-line-loaded types of specimens is such that the crack could deviate away from the original notch direction as the crack is driven **(8)**. This is usually observed in materials that have appreciable anisotropy of toughness and where the crack is driven in the tougher direction. Accuracy of the elastic displacement relationships decreases with deviation from the crack line; discard the data at deviation angles greater than 10 deg.

9. Calculation and Interpretation

9.1 To develop an R-curve, generate and use crack length and load data to calculate crack-extension force, K.

9.1.1 For the center-cracked tension specimen use either of the two following and equally appropriate expressions:

$$K = (P/WB)\sqrt{a}\cdot[1.77 - 0.177\,(2a/W) + 1.77\,(2a/W)^2]$$

or

$$K = (P/WB)\,(\pi a \sec(\pi a/W))^{\frac{1}{2}}$$

where:

P = applied load,
B = material thickness,
W = width of specimen, and
a = plastic-zone corrected half-crack length.

9.1.2 For the CS and CLWL specimens, determine K as follows:

$$K = (P/BW^{1/2})\,[29.6\,(a/W)^{1/2} - 185.5\,(a/W)^{3/2} + 655.7\,(a/W)^{5/2} - 1017.0\,(a/W)^{7/2} + 638.9\,(a/W)^{9/2}]$$

where:

a = plastic-zone corrected crack length measured from the load line, and
W = specimen width measured from the load line.

9.1.3 Alternatively, values appearing in Table 2 may be used to calculate K.

9.1.4 The crack length used in the expressions of 9.1.1 and 9.1.2 is the effective crack length, which is the total physical crack length plus a correction for plastic zone, r_Y. Correct physically measured crack lengths as follows:

$$a_e = (a_0 + \Delta a + r_Y)$$

where:

a_0 = starting half-crack length in a CCT test or crack length in CS and CLWL tests,
Δa = physical crack growth at one crack tip, and
r_Y = plastic-zone adjustment

$$r_Y = (1/2\pi)(K^2/\sigma_Y^2)$$

9.1.5 The expression of 9.1.4 for r_Y is most accurate for high-strength materials of yield strength-to-density ratios above 700 000 psi/lb·in.$^{-3}$ (174 kPa/kg·m^{-3}). Lower-strength,

high-toughness materials require increasing reliance on compliance methods to correct for plastic-zone effects.

10. Compliance Methods

10.1 *Determination of Effective Crack Length*—The compliance technique uses elastic-spring characteristics of the specimen calibrated over varied crack lengths **(9)**. A calibration curve may be developed experimentally by elastically loading specimens of varied crack sizes and determining the elastic reciprocal spring constant or reciprocal slope of load versus displacement record. Normalize these reciprocal slopes for material thickness and elastic modulus and plot against crack length-to-specimen width ratio. An analytically developed expression for the compliance of the CCT specimen, which can be used instead of an experimentally developed curve **(10)** is as follows:

$$\frac{E[2v]}{\sigma W} = 2\{(\pi a/W)/\sin(\pi a/W)\}^{1/2} \left\{\frac{2W}{\pi Y}\cosh^{-1}\left(\frac{\cosh \pi Y/W}{\cos \pi a/W}\right) - \frac{1+\mu}{\left[1+\left(\frac{\sin \pi a/W}{\sinh \pi Y/W}\right)^2\right]^{1/2}} + \mu\right\} Y/W$$

$$\left(\text{valid for } 0.2 < \frac{2a}{W} < 0.8;\ \frac{Y}{W} \leq 0.5\right)$$

where:

E = Young's modulus,
$2v$ = center-opening displacement at center hole,
σ = gross stress, P/BW,
P = load,
B = sheet thickness,
W = sheet width,
Y = half span of gage,
a = effective half-crack length, and
μ = Poisson's ratio.

10.2 The compliance calibration curve for a 16-in. (405-mm) wide CCT panel using near-zero gage span is presented in Fig. 12. Note that the accompanying analytical curve for compliance was developed for a specific gage half-span-to-specimen width ratio, Y/W.

10.3 In testing to develop an R-curve, the test record of load versus clip-gage displacement for the CCT and CS test, or the $2v1$ versus $2v2$ record for the CLWL test, will have an initial linear portion, the slope of which should correspond to the starting crack length in the specimen.

10.3.1 In CCT and CS tests, compare the crack length predicted from the initial slope of the test record to the initial crack length. If they differ by more than $0.003W$, treat the initial slope and actual crack length as a single compliance calibration point and vertically adjust the position of the compliance calibration curve to pass through this point using an overlay having the calibration curve shape. Alternatively, this operation may be done arithmetically. Determine all subsequent crack lengths from this transposed curve.

10.3.2 To develop an R-curve for either a CCT or a CS test, draw secants to the test curve from the origin to arbitrarily selected points on the test record (load versus displacement) as shown in Fig. 13. The reciprocal slopes of these secants correspond to effective crack lengths at their points of intersection with the test record. Normalize the reciprocal slopes for elastic modulus and material thickness and enter the calibration record to determine a_e/W.

10.4 In CCT and CS tests, partial unloading at any given point in the test will result in a return slope different from the secant discussed in 10.3.2. The unloading slopes correspond to the physical crack length. This load reversal shall be only enough to establish the return slope accurately from which the physical crack length can be determined. Should the test record not return linearly immediately upon unloading, factors other than material behavior are influencing the test record and return slope measurements should be suspect.

10.5 In a CLWL test record **(11)**, the initial linear relationship between displacements at locations $V1$ and $V2$ corresponds to the starting physical crack length in the specimen, and should be accurate within $0.005W$. The $V1/V2$ double compliance calibration curve cannot be shifted as with the CCT and CS specimen single compliance relationships. Despite possible error in prediction of initial crack length, a_0, the ability to determine increments of crack growth should remain unimpaired. However, if the starting crack length is in error by more than 3 % of a_0, the data shall be discarded and the test equipment

checked for conformance to the requirements of this recommended practice. Increments of crack growth are indicated by subtracting the compliance-indicated initial crack length from the crack lengths determined in succeeding increments.

10.6 Calculate K in accordance with expressions in 9.1.1 or 9.1.2 using compliance-determined effective crack lengths.

11. Report

11.1 The report shall include the following:

11.1.1 Type and size of specimen used,

11.1.2 Crack propagation direction (see Method E 399 for coding system),

11.1.3 Material thickness,

11.1.4 Yield strength,

11.1.5 Fatigue precracking data, and

11.1.6 Percent oblique fracture (of value as supplementary information only).

11.2 The R-curve may be plotted in terms of either physical or effective crack extension. The legend shall contain the following information: (*a*) the method of plastic-zone adjustment to the physical crack length, and (*b*) whether the abscissa is given in terms of physical or effective crack extension. Instability predictions can be made only from effective crack-extension plots.

REFERENCES

(1) Srawley, J. E., and Brown, W. F., "Fracture Toughness Testing," *Symposium on Fracture Toughness Testing and Its Applications, ASTM STP 381*, Am. Soc. Testing Mats., 1965, pp. 133–198.

(2) Krafft, J. M., Sullivan, A. M., and Boyle, R. W., "Effect of Dimensions on Fast Fracture Instability of Notched Sheets," *Proceedings of the Crack Propagation Symposium*, College of Aeronautics, Cranfield, England, Vol 1, 1961, pp. 8–26.

(3) Heyer, R. H., and McCabe, D. E., "Plane-Stress Fracture Toughness Testing Using a Crack-Line-Loaded Specimen," *Engineering Fracture Mechanics*, EFMEA, Vol 4, pp. 393–412.

(4) Heyer, R. H., and McCabe, D. E., "Crack Growth Resistance in Plane-Stress Fracture Testing," *Engineering Fracture Mechanics*, EFMEA, Vol 4, pp. 413–430.

(5) Paris, P. C., and Sih, G. C., "Stress Analysis of Cracks," *Symposium on Fracture Toughness Testing and Its Applications, ASTM STP 381*, Am. Soc. Testing Mats., 1965, pp. 30–83.

(6) Sullivan, A. M., and Freed, C. N., "The Influence of Geometric Variables on K_c Values for Two Thin Sheet Aluminum Alloys," *NRL Report 7270*, NRLRA, National Research Laboratory, June 17, 1972.

(7) Feddersen, C. E., "Evaluation and Prediction of the Residual Strength of Center Cracked Tension Panels," *Damage Tolerance in Aircraft Structures, ASTM STP 486*, Am. Soc. Testing Mats., 1971, pp. 50–78.

(8) Cotterell, B., "On Fracture Path Stability in the Compact Tension Test," *International Journal of Fracture Mechanics*, IJFMA, Vol 6, 1970, pp. 189–192.

(9) Boyle, R. W., "Crack Growth in Notched Sheet Specimens," *Materials Research and Standards*, MTRSA, Am. Soc. Testing Mats., Vol 2, No. 8, 1962.

(10) Eftis, J., and Liebowitz, H., "On the Modified Westergaard Equation for Certain Plane Crack Problems," *International Journal of Fracture Mechanics*, IJFMA, Vol 4, December 1972.

(11) *Fracture Toughness Evaluation by R-Curve Methods, ASTM STP 527*, Am. Soc. Testing Mats., 1973.

TABLE 1 Double Compliance Elastic Calibration Curve—CS and CLWL Specimens

NOTE—Applicable only to the $V1$ and $V2$ locations shown in Fig. 7(*b*).

a/w	$2v1/2v2$[A]		a/w	$2v1/2v2$[A]		a/w	$2v1/2v2$[A]		a/w	$2v1/2v2$[A]	
	CLWL	CS		CLWL	CS		CLWL	CS		CLWL	CS
0.350	4.74	5.56	0.415	3.27	3.67	0.480	2.72	2.96	0.545	2.42	2.56
0.355	4.54	5.25	0.420	3.22	3.59	0.485	2.70	2.92	0.550	2.40	2.53
0.360	4.36	5.00	0.425	3.16	3.53	0.490	2.67	2.88	0.555	2.38	2.50
0.365	4.24	4.78	0.430	3.11	3.46	0.495	2.64	2.85	0.560	2.36	2.48
0.370	4.09	4.62	0.435	3.06	3.39	0.500	2.62	2.81	0.565	2.34	2.46
0.375	3.97	4.47	0.440	3.02	3.33	0.505	2.59	2.78	0.570	2.32	2.44
0.380	3.85	4.33	0.445	2.97	3.27	0.510	2.57	2.74	0.575	2.31	2.42
0.385	3.74	4.22	0.450	2.93	3.22	0.515	2.54	2.71	0.580	2.29	2.40
0.390	3.64	4.11	0.455	2.89	3.17	0.520	2.52	2.68	0.585	2.27	2.38
0.395	3.55	4.01	0.460	2.85	3.13	0.525	2.50	2.66	0.590	2.25	2.36
0.400	3.47	3.91	0.465	2.82	3.08	0.530	2.48	2.63	0.595	2.24	2.35
0.405	3.39	3.82	0.470	2.79	3.04	0.535	2.46	2.60	0.600	2.23	2.33
0.410	3.33	3.75	0.475	2.76	3.00	0.540	2.44	2.58			

[A] $2v1/2v2$ is moderately affected by clip gage span with less than ½ % error introduced by using 0.8-in. (20.3-mm) span instead of measurements on the crack line.

TABLE 2 Dimensionless Stress Intensity Factors and Compliance in Plane Stress for the Recommended CS and CLWL Specimens

NOTE—H/w = 0.6.
$V1$ at 0.1576W.

a/w	$KBW^{1/2}/P$	$EB2v1/P$		a/w	$KBW^{1/2}/P$	$EB2v1/P$	
		CLWL	CS			CLWL	CS
0.350	6.50	22.83	25.82	0.480	9.06	41.52	44.31
0.355	6.57	23.35	26.33	0.485	9.19	42.52	45.30
0.360	6.65	23.88	26.85	0.490	9.33	43.55	46.33
0.365	6.73	24.43	27.38	0.495	9.46	44.61	47.38
0.370	6.81	24.99	27.94	0.500	9.60	45.70	48.48
0.375	6.89	25.57	28.50	0.505	9.75	46.83	49.60
0.380	6.97	26.16	29.08	0.510	9.90	47.99	50.76
0.385	7.06	26.76	29.68	0.515	10.05	49.18	51.95
0.390	7.14	27.38	30.29	0.520	10.21	50.42	53.19
0.395	7.23	28.02	30.91	0.525	10.37	51.70	54.47
0.400	7.32	28.67	31.55	0.530	10.54	53.02	55.78
0.405	7.42	29.33	32.21	0.535	10.71	54.38	57.15
0.410	7.51	30.01	32.88	0.540	10.89	55.79	58.56
0.415	7.61	30.71	33.57	0.545	11.07	57.24	60.01
0.420	7.70	31.42	34.27	0.550	11.26	58.75	61.52
0.425	7.80	32.15	34.99	0.555	11.46	60.31	63.08
0.430	7.91	32.90	35.73	0.560	11.66	61.92	64.70
0.435	8.01	33.67	36.49	0.565	11.87	63.60	66.37
0.440	8.12	34.45	37.27	0.570	12.08	65.32	68.10
0.445	8.23	35.25	38.07	0.575	12.30	67.12	69.89
0.450	8.34	36.08	38.89	0.580	12.54	68.97	71.74
0.455	8.45	36.93	39.73	0.585	12.77	70.89	73.66
0.460	8.57	37.80	40.60	0.590	13.02	72.88	75.65
0.465	8.69	38.69	41.49	0.595	13.28	74.94	77.72
0.470	8.81	39.61	42.40	0.600	13.54	77.07	79.85
0.475	8.93	40.55	43.34				

Polynomial expressions fit to the above compliance values are:
Compact Specimen: $EB2v1/P = 103.8 - 930.4(a/w) + 3610\,(a/w)^2 - 5930.5(a/w)^3 + 3979(a/w)^4$.
CLWL: $EB2v1/P = 101.9 - 948.9(a/w) + 3691.5\,(a/w)^2 - 6064.0(a/w)^3 + 4054\,(a/w)^4$.

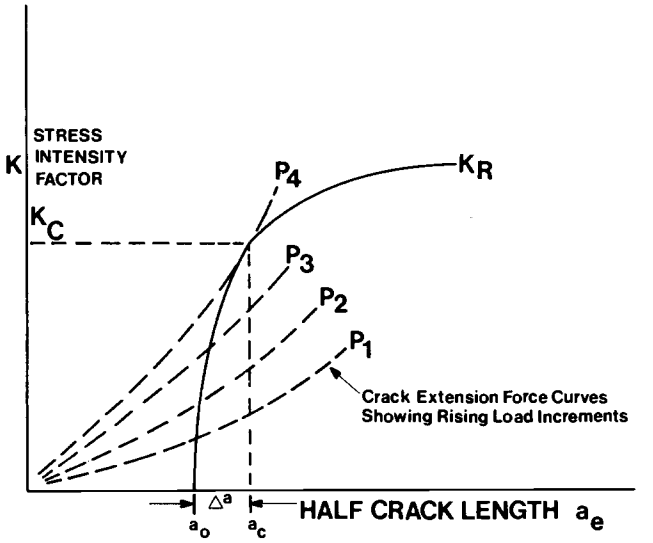

FIG. 1 Schematic Representation of *R*-Curve and Crack-Extension Force Curves Superposed on One Plot.

E 561

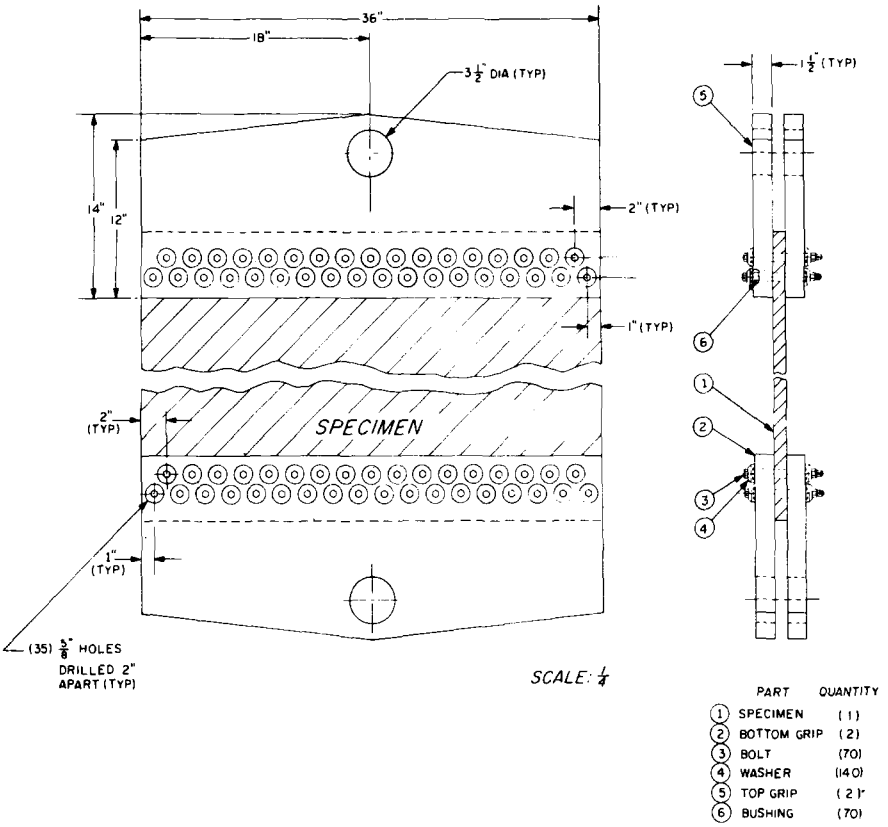

FIG. 2 Center-Cracked Tension Panel Test Setup.

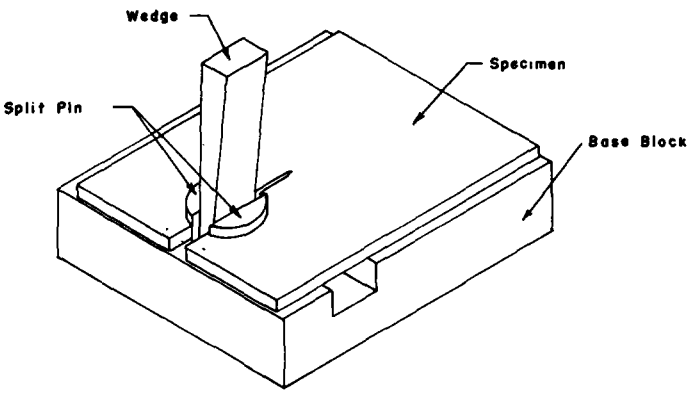

FIG. 3 Crack-Line-Loaded Specimen with Displacement-Controlled Wedge Loading.

E 561

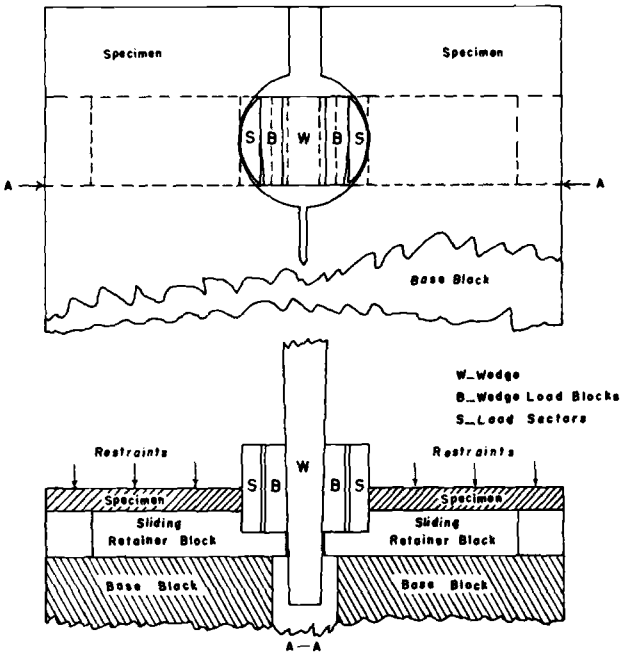

FIG. 4 Detail of Special Wedge and Split-Pin Setup Designed to Prevent Load-Line Shift.

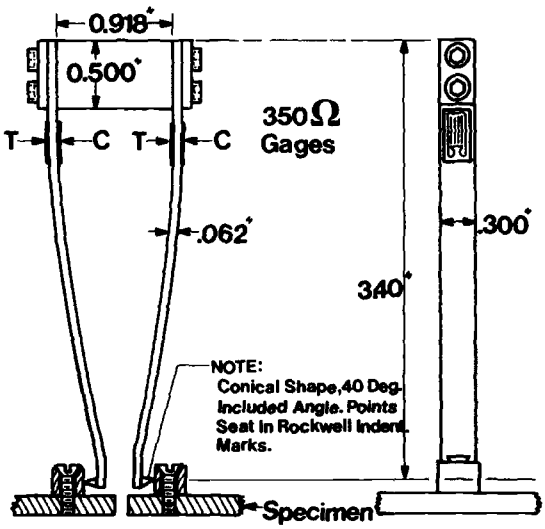

FIG. 5 Enlarged Clip Gage for Double Compliance Work.

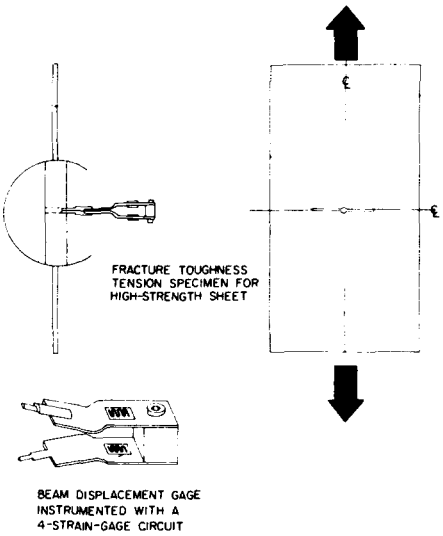

FIG. 6 Clip Gage for Use with Center-Cracked Tension Panels.

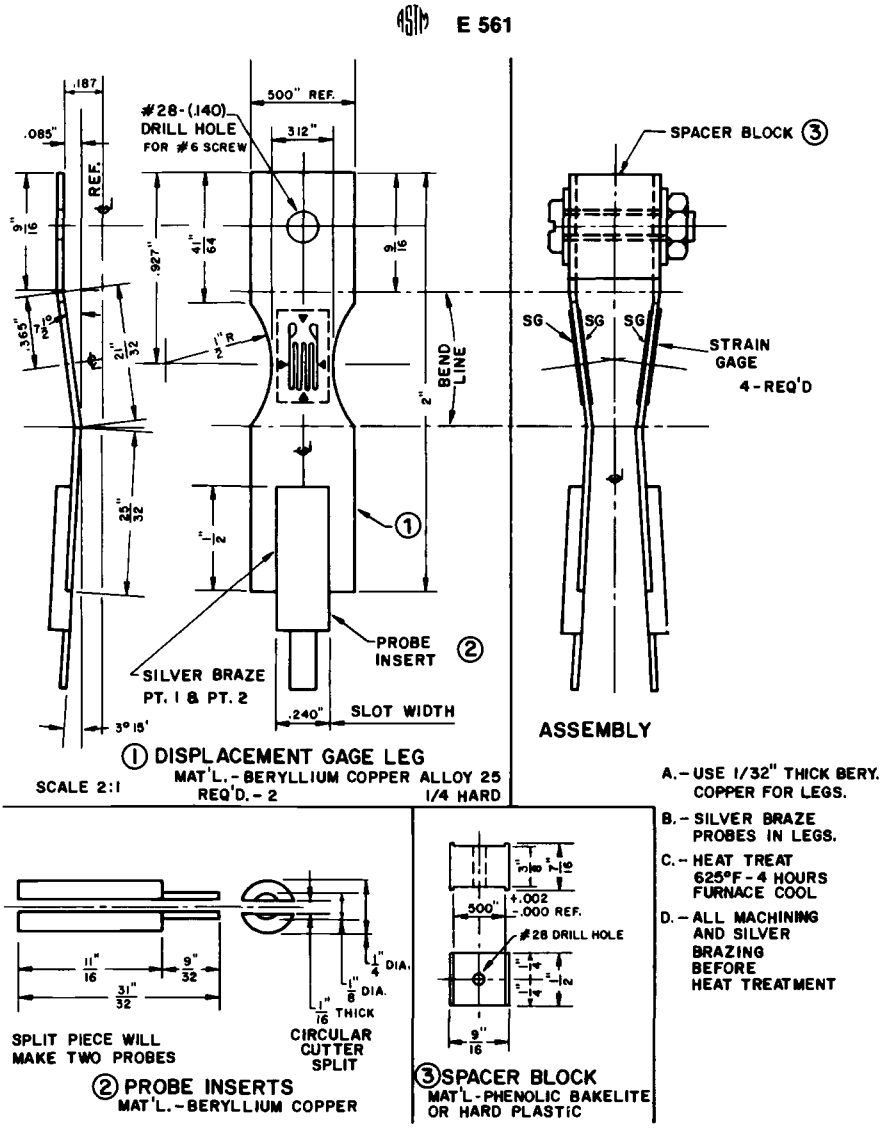

FIG. 6A Detail Drawings of CCT-Type Clip Gage.

E 561

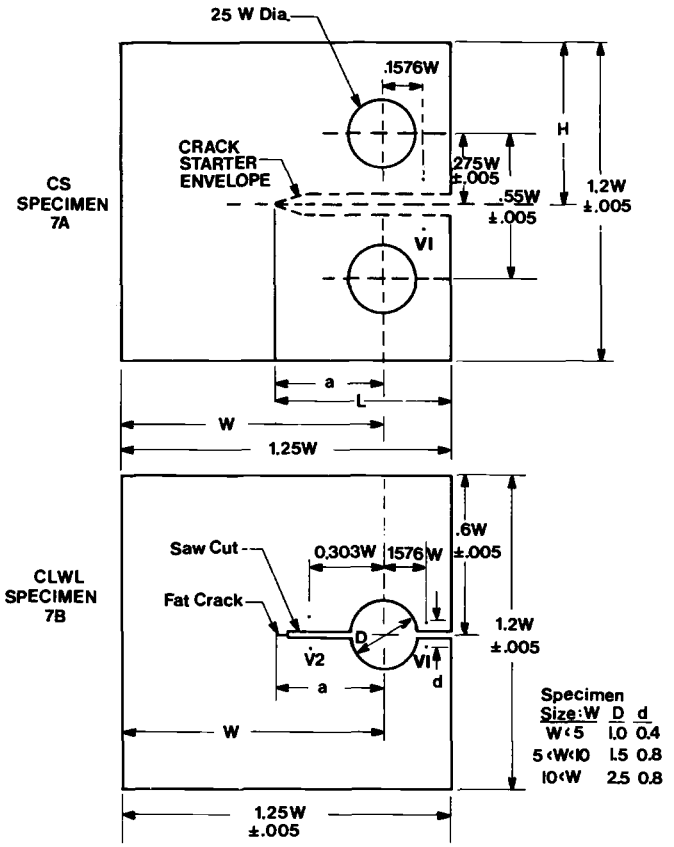

FIG. 7 Compact and Crack-Line-Wedge-Loaded Specimens.

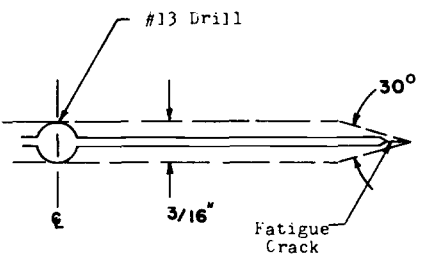

FIG. 8 Enlarged View of the Right Half of the Permitted Notch Envelope in CCT Panels.

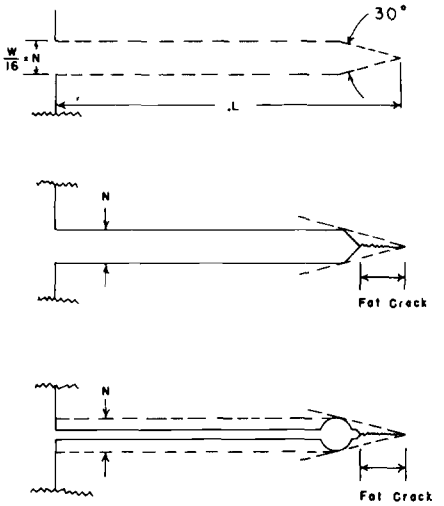

NOTE 1—N need not be less than 1/16 in. (1.6 mm) but must not exceed $W/10$.

NOTE 2—The intersection of the crack-starter tips with the two specimen faces shall be equidistant from the top and bottom edges of the specimen within $0.005W$.

FIG. 9 Envelope for Crack-Starter Notches and Examples of Notches Extended with Fatigue Cracks.

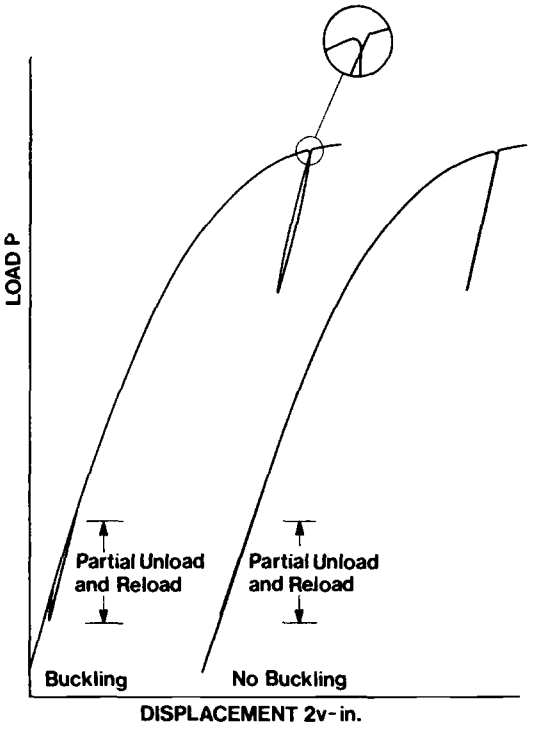

FIG. 10 Detection of Buckling from Compliance Test Records of CCT and CS Specimens.

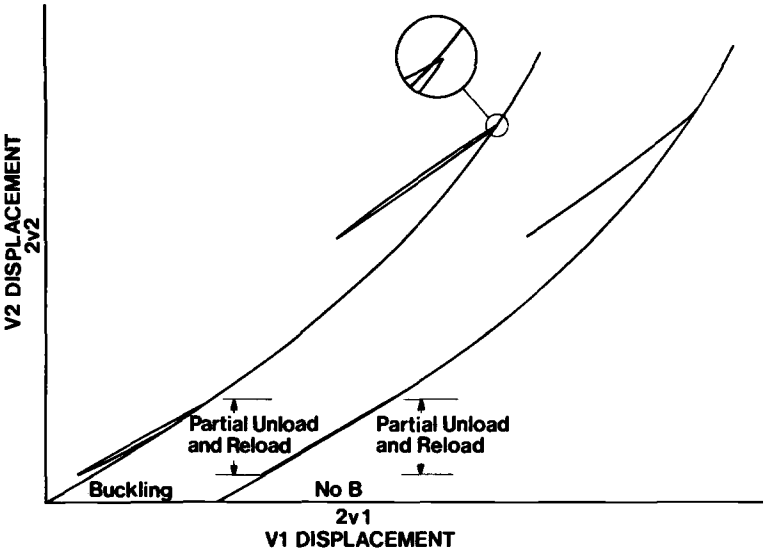

FIG. 11 Detection of Buckling from Double Compliance Test Records of CCT and CS Specimens.

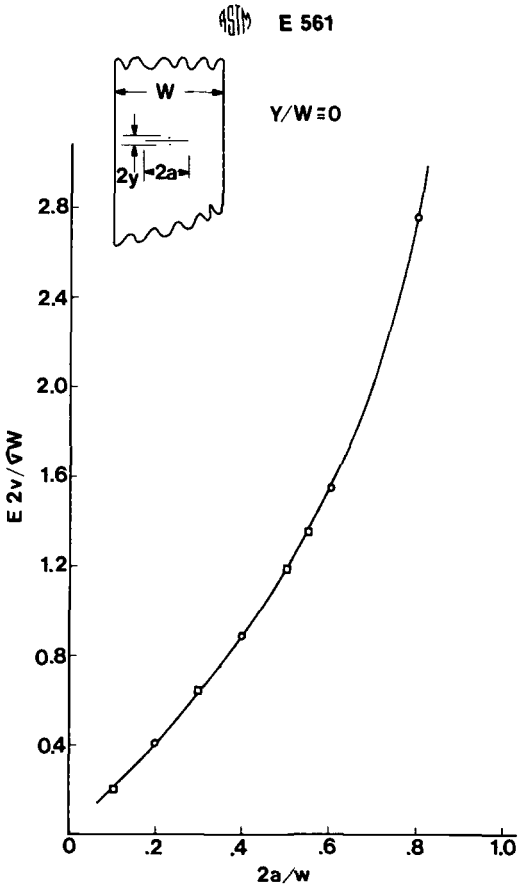

○ Boundary Value Collocation.
□ Finite Element

FIG. 12 Compliance Calibration Curve for a 16-in. (405-mm) Wide Center Notched Panel with Near Zero Gage Span.

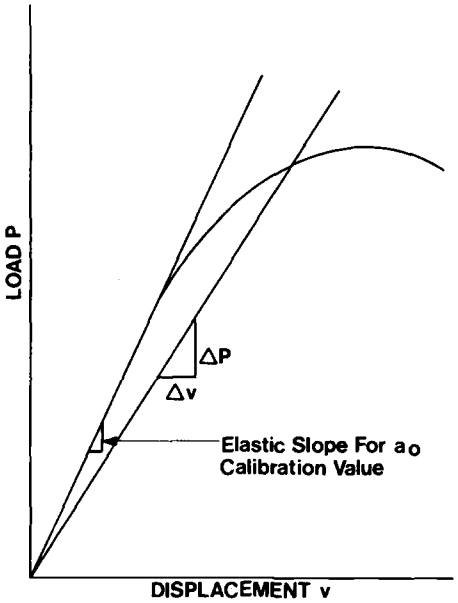

FIG. 13 Schematic Test Record for CCT or CS Specimens.

The American Society for Testing and Materials takes no position respecting the validity of any patent rights asserted in connection with any item mentioned in this standard. Users of this standard are expressly advised that determination of the validity of any such patent rights, and the risk of infringement of such rights, is entirely their own responsibility.

APPENDIX IV

Designation: E 602 - 76 T

Tentative Method for SHARP-NOTCH TENSION TESTING WITH CYLINDRICAL SPECIMENS[1]

This Tentative Method has been approved by the sponsoring committee and accepted by the Society in accordance with established procedures, for use pending adoption as standard. Suggestions for revisions should be addressed to the Society at 1916 Race St., Philadelphia, Pa. 19103.

1. Scope

1.1 This method covers the determination of a comparative measure of the resistance of thick-section materials to fracture under plane-strain conditions originating from a very sharp stress-concentrator or crack (Note 1). The quantity determined is the sharp-notch strength of a specimen of particular dimensions, and this value depends upon these dimensions as well as the characteristics of the material. The sharp-notch strength-to-yield strength ratio is also determined.

NOTE 1—Direct measurements of the plane-strain fracture toughness may be made in accordance with Method E 399, Test for Plane-Strain Fracture Toughness of Metallic Materials.[2] Comparative measures of resistance to fracture for sheet and thin plate may be obtained in accordance with Method E 338, Sharp-Notch Tension Testing of High-Strength Sheet Materials.[2]

1.2 This method is restricted to sharp machine-notched specimens (notch tip radii less than or equal to 0.0007 in. (0.018 mm)), and applies only to those materials (for example, aluminum and magnesium alloys) in which such sharp notches can be reproducibly machined.

1.3 This method is restricted to cylindrical specimens of two diameters as shown in Fig. 1. The 1 1/16-in. (27.0-mm) diameter specimen extends the range of application of this method to higher toughness levels than could be accommodated by the 0.5-in. (12.7-mm) diameter specimen.

1.4 This method is restricted to materials equal to or greater than 0.5 in. (12.7 mm) in thickness. Since the notch strength depends on the specimen diameter and, within certain limits, on the length, comparison of various material conditions must be based on tests of specimens having the same nominal diameter and a test section length sufficient to prevent significant interaction between the stress field of the specimen heads and that of the sharp notch (see Fig. 1).

1.5 The sharp-notch strength may depend strongly upon temperature within a certain range depending upon the characteristics of the material. This method is suitable for tests at any appropriate temperature. However, comparisons of various material conditions must be based on tests conducted at the same temperature.

NOTE 2—Further information on background and need for this type of test is given in the Fourth Report of ASTM Committee E-24 (**1**)[3] on Fracture Testing, as well as other committee documents (**2, 3, 4**).

NOTE 3—The values stated in U. S. customary units are to be regarded as the standard.

2. Applicable Documents

2.1 *ASTM Standards:*

B 557, Tension-Testing Wrought- and Cast-Aluminum and Magnesium Alloy Products[4]

E 4, Verification of Testing Machines[5]

E 8, Tension Testing of Metallic Materials[6]

E 139, Recommended Practice for Con-

---

[1] This method is under the jurisdiction of ASTM Committee E-24 on Fracture Testing.

Current edition approved Dec. 31, 1976. Published June 1977. Originally published as information only November 1974.

[2] *Annual Book of ASTM Standards,* Part 10.

[3] The boldface numbers in parentheses refer to the list of references appended to the method.

[4] *Annual Book of ASTM Standards,* Part 7.

[5] *Annual Book of ASTM Standards,* Parts 10, 14, 32, 35, and 41.

[6] *Annual Book of ASTM Standards,* Parts 6, 7, and 10.

ducting Creep, Creep-Rupture, and Stress-Rupture Tests of Metallic Materials[2]

3. Significance

3.1 The sharp notch-to-yield strength ratio provides a comparative measure of resistance to plane-strain fracture originating from cracks or crack-like discontinuities. However, at sufficiently high values, the notch-to-yield strength ratio progressively loses sensitivity to changes in plane-strain fracture toughness. Available data indicates that useful sensitivity is maintained up to a value of about 1.3. At a given level of toughness the notch-strength ratio decreases with an increase in notch specimen size. Therefore, when the notch-to-yield strength ratio of the 0.5-in. (12.7-mm) diameter specimen exceeds 1.3, the 1 1/16-in. (27.0-mm) diameter specimen is recommended. The sharp notch-to-yield strength ratio is not intended to provide an absolute measure of resistance to crack propagation which might be used in calculations of the strength of structures. However, it can serve the following purposes:

3.1.1 In research and development of materials, to study the effects of the variables of composition, processing, heat-treament, etc.

3.1.2 In service evaluation, to compare the resistance to plane-strain fracture of a number of materials that are otherwise equally suitable for an application, or to eliminate materials when an arbitrary minimum acceptable sharp-notch strength can be established on the basis of service performance correlation, or some other adequate basis.

3.1.3 For specifications of acceptance and manufacturing quality control when there is a sound basis for establishing a minimum acceptable sharp-notch strength or ratio of sharp-notch strength to tensile yield strength. Detailed discussion of the basis for setting minimum values in a particular case is beyond the scope of this method.

3.2 The sharp-notch strength may vary with temperature. The temperature of the specimen during each test shall, therefore, be controlled and recorded. Tests shall be conducted throughout the range of expected service temperatures to ascertain the relation between notch strength and temperature. Care shall be taken that the lowest and highest anticipated service temperature are included.

3.3 Limited results suggest that the sharp-notch strengths of aluminum and magnesium alloys at room temperature (**5**) are not appreciably sensitive to rate of loading within the range of loading rates normally used in conventional tension tests. At elevated temperatures, rate effects may become important and investigations should be made to determine their magnitude and establish the necessary controls. Where very low or high rates of loading are expected in service, the effect of loading rate should be investigated using special procedures that are beyond the scope of this method.

3.4 The sharp-notch strength is a fracture property and like other fracture properties will normally exhibit greater scatter than the conventional tensile or yield strength. In addition, the sharp-notch strength can be influenced by variations in the notch radius and by bending stresses introduced by eccentric loading. In order to establish a reasonable estimate of the average fracture properties it is recommended that replicate specimens be tested for each metal condition to be evaluated.

4. Description of Terms

4.1 *Sharp-Notch Strength* – As determined by this method, a value determined by dividing the maximum load sustained in a tension test of an appropriate specimen by the initial area of supporting cross section in the plane of the notch. This calculation of notch strength takes no account of any crack extension that may occur during the test. The sharp-notch strength is thus analogous to the tensile strength of a standard tension test specimen that is based on the area of the specimen before testing.

5. Apparatus

5.1 *Tension-Testing Machine* conforming to the requirements of Methods E 4.

5.2 *Loading Fixtures* – Any loading fixture may be used provided that it meets the requirements of Section 7 for percent bending. Axial alignment fixtures for threaded end specimens (**6**) have been designed which exceed these requirements. Tapered seat grips incorporating a quick operating feature have been proposed for testing smooth specimens

(7). These have also been used in tests of sharply notched cylindrical specimens (5). It has been shown (8) that these grips can meet the bending requirements of Section 7 if loading rod aligners are used and if the component parts of the loading train are so positioned that bending introduced by one component is cancelled by that introduced by another.

NOTE 4—The apparent strength of sharply notched cylindrical specimens can be reduced by bending stresses resulting from displacement between a line normal to the center of the notch plane and the load line. These misalignments can arise from errors in machining the specimen but more frequently are associated with the relative fits and angular relationships between the mating parts of the loading train components including attachments to the tensile machine. Generally, these misalignments will vary in a random manner from test to test and thereby contribute to the scatter in the notch strength values. The effect of misalignment on the notch strength will depend on its magnitude and the toughness of the material with the toughest metal conditions showing the smallest effects. Misalignments can be reduced to negligible levels by proper design of the loading train components which incorporate devices to provide isolation from misalignments inherent in the tensile machine. To function effectively these components must be designed to close tolerances and precision machined so that very low bending stresses will be encountered regardless of the relative position of the various components of the loading train.

5.3 *Temperature-Control Systems*—For tests at other than room temperature, any suitable means may be used to heat or cool the specimen and to maintain a uniform temperature over the region that includes the notch. The ability of the equipment to provide a region of uniform temperature shall be established by measurements of the temperature directly on the specimen in the region of the notch. A temperature survey shall be conducted either at each temperature level at which tests are to be made, or at a series of temperature levels at intervals of 50°F (30°C) over the range of test temperatures. At least three thermocouples shall be utilized in making the survey, one in or at the notch and one at each end of the reduced section. The temperature shall be held within ± 2½°F (± 1½°C) during the course of the test. At the test temperature, the difference between the indicated temperatures at any of the three thermocouple positions shall not exceed 5°F (3°C).

NOTE 5—Use of liquefied gases as coolants for tests below room temperature is generally satisfactory, but the use of liquid baths for heating specimens shall be avoided unless it can be established that the liquid has no effect on the sharp-notch strength of the material.

5.3.1 *Calibrated Thermocouples*—Temperature shall be measured with calibrated thermocouples used in conjunction with potentiometers or millivoltmeters. Such measurements are subject to various errors and reference should be made to Recommended Practice E 139 for a description of these errors. Thermocouple beads should be formed in accordance with the "Preparation of Thermocouple Measuring Junctions," which appears in the "Related Material" section of this publication. Base metal thermocouples used at elevated temperatures can be subject to errors on re-use unless the depth of immersion and the temperature gradients of the initial exposure are reproduced. These immersion effects should be very small at the temperatures of interest for the testing of aluminum and magnesium alloys. However, when thermocouples are re-used it is desirable to occasionally check them against new thermocouples. For further information on the use of thermocouples, see Ref (9).

5.3.2 The temperature of the specimen during any test at other than room temperature shall be measured at one, or preferably more than one, position within the uniform temperature region during the test. The only exception to this would involve liquefied gases, where it is shown by a temperature survey that constant temperature can be maintained following an initial holding period. The thermocouples and measuring instruments shall be calibrated and shall be accurate to within ± 2½°F (± 1½°C).

5.3.3 The method of temperature measurement must be sufficiently sensitive and reliable to ensure that the temperature of the specimen is within the limits specified in 5.3.

5.3.4 The temperature-measuring apparatus should be calibrated periodically against standards traceable to the National Bureau of Standards. An overall calibration accuracy of ± 2½°F (± 1½°C) of the nominal test temperature should be readily achieved.

5.3.5 It should be appreciated that the strength of some alloys will be altered by sufficiently long soaking periods at elevated temperature with or without load. For this reason

heating and soaking times should be considered in analyzing the results.

6. Test Specimens

6.1 The two recommended designs of notch-test sections are shown in Fig. 1. The test section of the 1/2-in. (12.7-mm) diameter specimen shall have a minimum length L = 1 in. (25.4 mm). The test section of the 1 1/16-in. (27.0-mm) diameter specimen shall have a minimum length L = 2 1/8 in. (55.0 mm).

6.2 *Specimen Heads*—The notched test sections may be loaded through tapered heads (**5, 7, 8**) or threads (**6**) or any other type of fastening that will not exceed the maximum bending requirements of Section 7. Examples of typical specimens with tapered heads and threaded heads are shown in Figs. 2 and 3 respectively.

6.3 The sharpness of the machined notches is a critical feature of the specimen and special care is required to prepare them (**10**). In particular, the final cuts shall be light and slow, to avoid the introduction of significant residual stresses. For each specimen, the notch-tip radius shall be measured prior to testing and any specimen that does not meet the 0.0007-in. (0.018-mm) limit in Fig. 1 shall be discarded or reworked. (See Section 8.)

6.4 Because it is necessary to minimize bending stresses during testing, particular care should be taken to machine the notched specimens with minimum run-out. Cylindrical surfaces and specimen heads shall be machined with an eccentricity with respect to the notch not exceeding 0.001 in. (0.025 mm). Normally the specimens will be machined between centers and where possible, all machining should be completed in the same setup. If this is not possible the centers used in the first operation should be retained and care should be taken to keep them free from dirt or damage.

6.5 It is recommended that replicate specimens be tested for each distinct set of values of the controlled variables (material factors, thickness, and temperature; see 3.4).

7. Verification

7.1 The purpose of the verification procedure is to demonstrate that the loading fixture can be used by the test operator in such a way as to consistently meet the limitation on percent bending specified in 7.3.1. Thus, the verification procedure should involve no more care in setup than will be used in the routine testing of the sharply notched cylindrical specimens. For example, if aligners are to be used in the notch tests these devices should be employed in exactly the same way during the verification procedure. The bending stresses under tensile load shall be measured using the verification specimens of the design shown in Fig. 4. These measurements should be repeated whenever (*1*) the fixtures are installed in a different tensile machine, (*2*) a different operator is making the notch tests, or (*3*) damage is suspected. The verification specimen must be machined very carefully with attention to all tolerances and concentricity requirements. This specimen shall be carefully inspected with an optical comparator before strain gages are attached in order to ensure that these requirements are met. After the gages are applied, it will no longer be possible to meaningfully inspect the specimen, so care should be exercised in its handling and use.

7.2 The verification specimens shall be instrumented with four foil resistance strain gages mounted at 90-deg positions around the circumference of the specimen at the center of the length of the reduced section. These gages should be as narrow as possible to minimize strain averaging. Gages having a width of 0.010 in. (0.25 mm) and a length of about 0.1 in. (2.5 mm) are commercially available and have been used in this application (**6**).

7.3 Details of the verification procedure and reduction of the strain gage data have been described (**6**) and the reader is referred to this information before proceeding with the measurements. For the present purposes two cases can be recognized: (*1*) a case in which the fixtures have been specially designed to provide low bending stresses and are expected to give satisfactory results without the use of any special precautions during their service life, and (*2*) a case in which the fixtures have been designed for some less rigorous application and are to be adapted to tests on sharply notched cylindrical specimens.

7.3.1 *Case 1*—Install the verification specimen in the upper portion of the loading fix-

tures and take zero readings on all four gages. Connect the lower fixtures and reference all rotatable components of the loading train in a common line. Load the assembly to produce 30-ksi (205-MPa) stress in the reduced section of the verification specimen and record the readings of all four gages. Unload the specimen and rotate any selected component of the loading train (except the specimen) 90 deg, reload to the previous load, and record the readings of all four gages. Repeat this procedure, rotating the selected component in 90-deg increments in order to find the rotational position giving the highest percent bending. The component should remain in that position and the same procedure followed for the remaining components, one at a time, each being retained in the position giving the highest bending. If the bending is less than 10 % at all times, rotate each loading train component 360 deg so that the same rotational positions are maintained but different thread engagement is produced, and repeat the gage readings. If the bending is still less than 10 %, remove and reinstall the verification specimen three times, maintaining the same relationship between the components of the loading train. After the last installation, remove the lower portion of the loading fixtures and repeat the zero readings on all four gages. These should agree with the original zero readings within 20 μin. (0.5 μm). If the bending at all stages of the verification procedure is less than 10 %, the fixture and tensile machine combination can be assumed to be satisfactory for the testing of sharply notched cylindrical specimens with no attention being given to the relative rotational position of the components of the loading train. If the maximum bending is greater than 10 % at any stage of the verification procedure, the strain gage data should be examined to determine the misalignment contribution of the various components. A procedure for doing this has been described (**6**). Based on the information obtained from this examination the fixture should be reworked or treated as in Case 2.

7.3.2 *Case 2* – Proceed as in Case 1, except retain the component parts of the loading train in the positions giving minimum bending. If an arrangement can not be found that yields less than 10 % bending, the fixtures should not be used for testing sharply notched cylindrical specimens. If an arrangement can be found that yields less than 10 % bending, the components should be marked in a common line to reference this position. Each component should then be rotated 360 deg and the strain gage readings repeated. If the maximum bending is still less than 10 %, the verification specimen should be removed and reinstalled three times with the strain gage readings repeated each time. If the bending remains below 10 % the fixture may be used for testing sharply notched cylindrical specimens in accordance with this method. However, care shall be taken to always maintain the same relative rotational positions of the components of the loading train, and if for any reason the loading train is disassembled, the percent bending shall be redetermined.

7.4 The percent bending stress is defined as follows:

$$PBS = \Delta\sigma_m/\sigma_o \times 100$$

where:

$\Delta\sigma_m$ = difference between the maximum outer fiber stress and the average stress, σ_o, in the specimen.

7.4.1 The following relationships may be used to calculate percent bending:

$$PBS = [(\Delta g_{1,3})^2 + (\Delta g_{4,2})^2]^{1/2}\ 100/g_0$$

where:

$\Delta g_{1,3} = (g_1 - g_0) - (g_3 - g_0)/2 = (g_1 - g_3)/2,$

$\Delta g_{4,2} = (g_4 - g_0) - (g_2 - g_0)/2 = (g_4 - g_2)/2,$

and

$g_0 = g_1 + g_2 + g_3 + g_4/4$

where:

g_1, g_2, g_3, and g_4 are the strain gage readings in microinches per inch, and compressive strains are considered to be negative.

7.4.2 The reliability of the gage readings may be checked by comparing the average readings of each pair of opposite gages; they should agree within 1 %.

7.5 For a satisfactory test setup, the percent bending stress, *PBS*, shall be no greater than 10 % at 30 ksi (205 MPa) average tensile stress.

8. Procedure

8.1 *Dimensions* – With the specimen mounted between centers, use an optical comparator with a magnification of at least 50 to

determine the total run-out at the notched section, along the barrel and at the heads. If the specimen has threaded ends, run-out measurements should be made on the root diameter of the threads, following cleaning with a brush and acetone or a similar quick drying solvent. If the total run-out at any of these sections exceeds 0.002 in. (0.05 mm) the specimen should be rejected. Conformance to the notch radius specification can be determined on the comparator by matching the projected notch contour against circles of known radius. If, when rotating the specimen, the notch radius at any point exceeds 0.0007 in. (0.018 mm) the specimen should be rejected. **Caution:** It is necessary that the notch be free from dirt or fluids which could obscure the true contour at the root. Careful cleaning is essential. This may be accomplished by washing with acetone or a similar solvent to remove cutting oil and loose foreign matter. Following this washing, *dry* compressed air or a *clean dry* camel's hair brush, or both, can be used to remove the remaining foreign matter. The notch diameter d and the barrel diameter D can be measured on the comparator. Alternatively, the notch diameter can be measured with chisel micrometers provided the chisel is sharp enough to bottom in the notch and care is taken not to brinell the notch root. The barrel diameter may be measured with conventional micrometers. Reject specimens that do not meet the cylindrical dimension tolerances shown in Fig. 1.

8.2 *Testing*—Conduct the test in a manner similar to a conventional tension test except that no extensometer is required. Control the testing speed so that the maximum stress rate on the notched section does not exceed 100 ksi (690 MPa)/min at any stage of the test. Record the maximum load P reached during the test to the smallest increment of load that can be estimated.

9. Calculation

9.1 *Sharp-Notch Strength*—Calculate the sharp notch strength as follows:

$$SNS = 4P/\pi d^2$$

9.2 *Sharp-Notch Strength-to-Yield Strength Ratio:*

9.2.1 The ratio of the sharp-notch strength to the 0.2 % offset tensile yield strength (NSR) is of significance as a comparative index of plane-strain fracture toughness (**11**). Prepare standard tension specimens from the same stock that was used to prepare the sharply notched cylindrical specimens. The orientation of these tension specimens with respect to the major deformation direction should be identical to the orientation of the notched specimens, and the location of the tension specimens in the stock should be as close as possible to that of the notched specimens. If heat treatment is involved, process the tension and the notched specimens together. Test the tension specimens in accordance with Methods E 8 and B 557.

9.2.2 For the purpose of calculating the sharp-notch strength-to-yield strength ratio at other than room temperature, the yield strength may be interpolated from values at temperatures not more than 100°F (50°C) above and below the temperature at which the sharp-notch test is performed.

10. Report

10.1 The report shall include the following information for each specimen tested:

10.1.1 Test section length (l),

10.1.2 Major diameter (D),

10.1.3 Notch diameter (d),

10.1.4 Notch root radius (r),

10.1.5 Temperature,

10.1.6 Maximum load (P), and

10.1.7 Sharp-notch strength (SNS).

10.2 The tensile ultimate and 0.2 % offset yield strength corresponding to each set of controlled variables used for the notch tests shall also be reported, along with the sharp-notch strength-to-yield strength ratio (NSR).

E 602

REFERENCES

(1) "Screening Tests for High-Strength Alloys Using Sharply Notched Cylindrical Specimens," Fourth Report of a Special ASTM Committee, *Materials Research and Standards*, MTRSA, Am. Soc. Testing Mats., March 1962, pp. 196-203.

(2) *Symposium on Fracture Toughness Testing and Its Applications, ASTM STP 381*, Am. Soc. Testing Mats., 1965.

(3) Brown, W. F., and Srawley, J. E., eds., *Plane Strain Crack Toughness Testing of High-Strength Metallic Materials, ASTM STP 410*, Am. Soc. Testing Mats., 1967.

(4) Brown, W. F., ed., *Review of Developments in Plane Strain Fracture Toughness Testing, ASTM STP 463*, Am. Soc. Testing Mats., 1970.

(5) Kaufman, J. G., "Sharp-Notch Tension Testing of Thick Aluminum Alloy Plate with Cylindrical Specimens," *Fracture Toughness, ASTM STP 514*, Am. Soc. Testing Mats., 1972, pp. 82-97.

(6) Jones, M. H., Bubsey, R. T., Succop, G., and Brown, W. F., "Axial Alignment Fixtures for Tension Tests of Threaded Specimens with Special Application to Sharply Notched Specimens for Use as K_{Ic} Screening," *Journal of Testing and Evaluation, JTEVA*, Am. Soc. Testing Mats., Vol 2, No. 5, pp. 378-386.

(7) Babilon, C. F. and Traenkner, H. A., "New Round Tension Test Specimen and Holders for Accuracy and Economy," *Proceedings, ASTEA*, Am. Soc. Testing Mats., Vol 64, 1964, pp. 1119-1127.

(8) Jones, M. H., and Brown, W. F. Jr., "Note on Performance of Tapered Grip Tensile Loading Devices," *Journal of Testing and Evaluation, JTEVA*, Am. Soc. Testing Mats., Vol 3, No. 3, pp. 179-181.

(9) *Manual on the Use of Thermocouples in Temperature Measurement, ASTM STP 470*, Am. Soc. Testing Mats., 1971.

(10) March, J. L., Ruprecht, W. J., and Reed, George, "Machining of Notched Tension Test Specimens," *ASTM Bulletin*, ASTBA, Am. Soc. Testing Mats., No. 244, 1960, pp. 52-55.

(11) Kaufman, J. G., Sha, G. T., Kohm, R. I., and Bucci, R. J., "Notch Yield Ratios as a Quality Control Index for Plane Strain Fracture Toughness," *Cracks and Fracture, ASTM STP 601*, Am. Soc. Testing Mats., 1976.

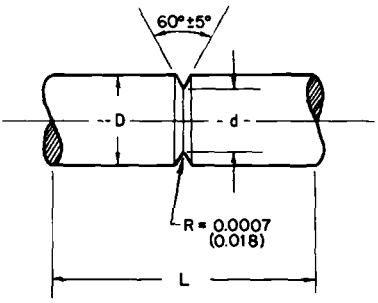

NOTE 1—Dimensions are in inches and (millimetres).
NOTE 2—*d* must be concentric with *D* within 0.001 in. (0.025 mm).

Nominal Size	*D*	*d*	*L*, minimum
1/2 in.	0.500 ± 0.005 (12.7 ± 0.13)	0.353 ± 0.005 (8.96 ± 0.13)	1.00 (25.4)
1 1/16 in.	1.060 ± 0.005 (26.9 ± 0.13)	0.750 ± 0.005 (19.0 ± 0.13)	2.13 (54.1)

FIG. 1 Standard Test Sections.

E 602

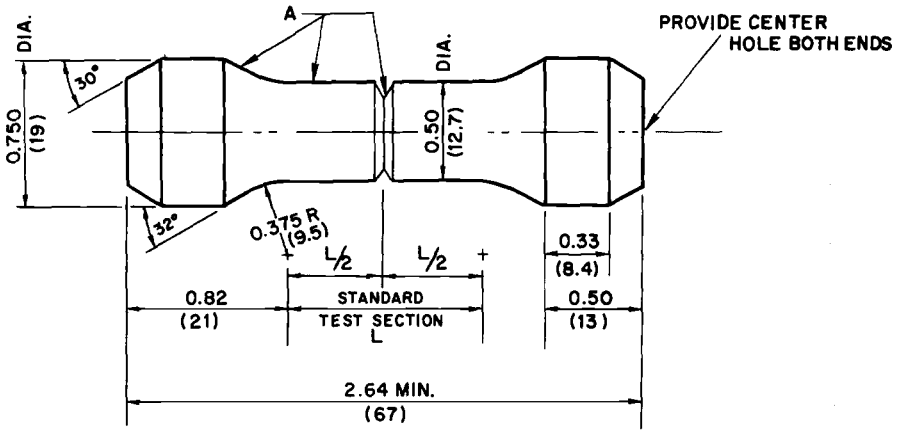

NOTE 1—Dimensions are in inches and (millimetres).
NOTE 2—*A* surfaces must be concentric with each other to within 0.001 in. (0.025 mm).

FIG. 2 Typical Tapered-Head Notched Tension Specimen.

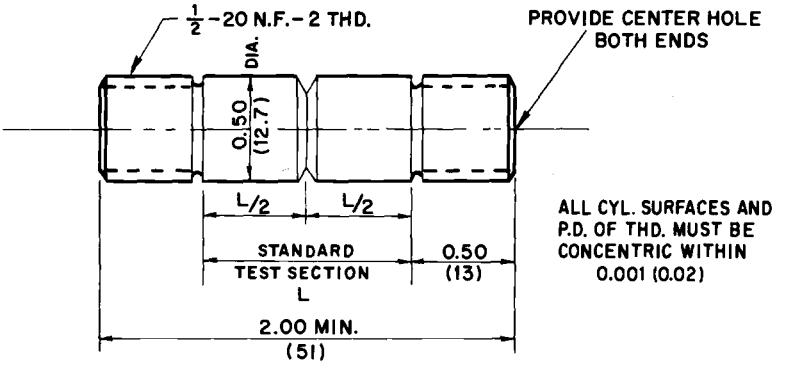

NOTE—Dimensions are in inches and (millimetres).

FIG. 3 Typical Threaded-End Notched Tension Specimen.

E 602

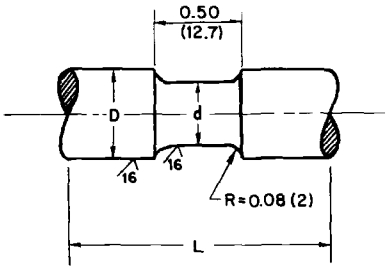

NOTE 1 – Dimensions are in inches and (millimetres).

NOTE 2 – D,d and specimen heads must be concentric with each other within 0.001 in. (0.025 mm).

Nominal Size, in.	D	d	L, maximum
1/2	0.500 (12.7)	0.353 (8.96)	1.50 (38.1)
1 1/16	1.060 (26.9)	0.750 (19.0)	2.63 (66.8)

NOTE 3 – All 0.000 dimensions ± 0.005 in. (0.13 mm).

NOTE 4 – Total specimen length must not exceed the length of the shortest notched specimen.

FIG. 4 Verification Specimens.

The American Society for Testing and Materials takes no position respecting the validity of any patent rights asserted in connection with any item mentioned in this standard. Users of this standard are expressly advised that determination of the validity of any such patent rights, and the risk of infringement of such rights, is entirely their own responsibility.